higher education & training

Department:
Higher Education and Training
REPUBLIC OF SOUTH AFRICA

T180(E)(A2)T

APRIL EXAMINATION

NATIONAL CERTIFICATE

BUILDING SCIENCE N1

(15070001)

2 April 2015 (Y-Paper)
13:00–16:00

Calculators may be used.

Candidates need drawing instruments.

This question paper consists of 5 pages, 1 addendum and 1 formula sheet.

ENGINEERING

Copyright reserved

DEPARTMENT OF HIGHER EDUCATION AND TRAINING
REPUBLIC OF SOUTH AFRICA

NATIONAL CERTIFICATE

BUILDING SCIENCE N1

TIME: 3 HOURS

MARKS: 100

INSTRUCTIONS AND INFORMATION

1. Answer ALL the questions.
2. Read ALL the questions carefully.
3. Number the answers according to the numbering system used in this question paper.
4. All sketches and/or diagrams must be done in pencil and be neat, reasonably large and fully labelled.
5. Rule off across the page on completion of each question.
6. Assume that a 1 kg mass exerts a force of 10 N.
7. Write the formula before starting with a calculation.
8. Numerical answers are to be rounded off to two decimal places after the decimal comma.
9. Write neatly and legibly.

ENGINEERING

Copyright reserved

QUESTION 1

Give the name of the S1 unit, together with the symbol, in which each of the following is measured:

1.1 Mass of a body

1.2 Pressure in gas

1.3 Weight of a body

1.4 Atmospheric pressure

1.5 Density of material

(5 x 1) **[5]**

QUESTION 2

2.1 Make a neat cross-sectional sketch of a tree trunk and label SIX different parts. (6)

2.2 Explain briefly the following terms as used in connection with timber:

2.2.1 Seasoning

2.2.2 Conversion

2.2.3 Preservation

(3 x 2) (6)

2.3 A timber beam 5,6 m long, 95 mm wide and 125 mm deep has a mass of 54,5 kg.

Calculate the density of the timber in kg/m³. (6)

[18]

QUESTION 3

3.1 State Charles's law. (3)

3.2 A quantity of gas has a volume of 5 m³ when at a pressure of 300 kilopascals.

Calculate the pressure when the gas occupies a volume of 3 m³, while the temperature stays constant. (3)

3.3 Make a neat, sectional sketch of a water-closet with a U-shape bend in the pipe and clearly show the water seal on the sketch (5)

[11]

ENGINEERING

Copyright reserved

QUESTION 4

4.1 Calculate the total quantity of water needed in a concrete mixture of 100 kg of cement with a water-cement ratio of 0,04. The answer must be in litres. (4)

4.2 Describe, with the aid of a neat sketch, the displacement method of determining the volume of a small irregular solid of non-porous material. (6)

4.3 Sketch and describe a simple experiment to show that the down-, up- and sidewards pressures at a point in a fluid are equal. (6)

[16]

QUESTION 5

5.1 Explain the term *Bow's notation.* (3)

5.2 A 4,5 kN force is acting to the left and a force of 2 450 N is acting to the right along the same line of action.

State the magnitude and direction of the following:

5.2.1 The resultant force

5.2.2 The equilibrant force

(2 x 2) (4)

5.3 Calculate the magnitude and direction of the resultant of the two forces shown in FIGURE 1, ADDENDUM A (attached). State the angle between the resultant and the 80 N force.

(No marks will be allocated for a graphical solution.) (8)

5.4 Determine, by means of the parallelogram of forces, the magnitude and direction of the equilibrant of the concurrent coplanar forces shown in FIGURE 2, ADDENDUM A (attached). (6)

[21]

QUESTION 6

6.1 Explain the term *coplanar forces.* (2)

6.2 FIGURE 3, ADDENDUM A (attached) shows four forces acting on a pin.

Determine graphically and clearly show the magnitude and direction of the equilibrant and also the magnitude of the horizontal and vertical components of the equilibrant. (12)

[14]

Copyright reserved

QUESTION 7

7.1 A concrete beam 6 m long with a mass of 2 400 kg, is simply supported at either end.

Calculate the reaction force at each end of the beam. (3)

7.2 Determine, by means of the link polygon method, the position and magnitude of the resultant of the three forces acting on the beam A – B shown in FIGURE 4, ANNEXURE A (attached). Show clearly the direction of the resultant and the distance from the left-hand end A of the beam. (12)
[15]

TOTAL: 100

ENGINEERING

Copyright reserved

ADDENDUM A

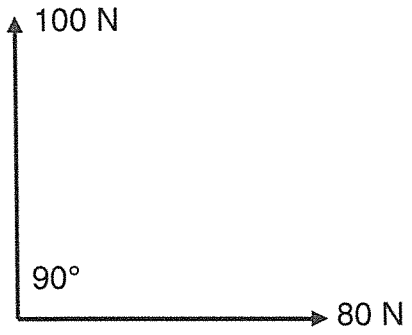

FIGURE 1

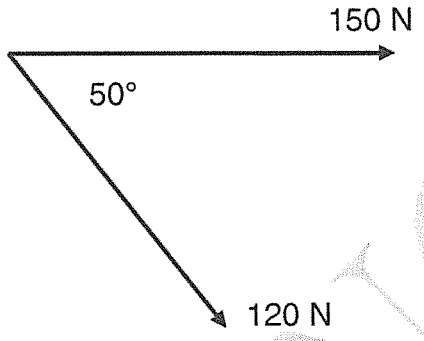

FIGURE 2

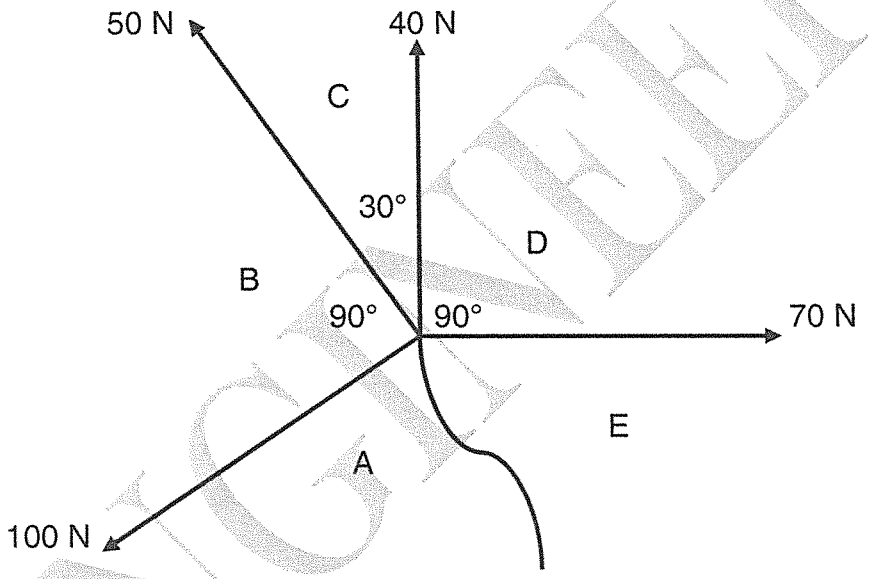

FIGURE 3

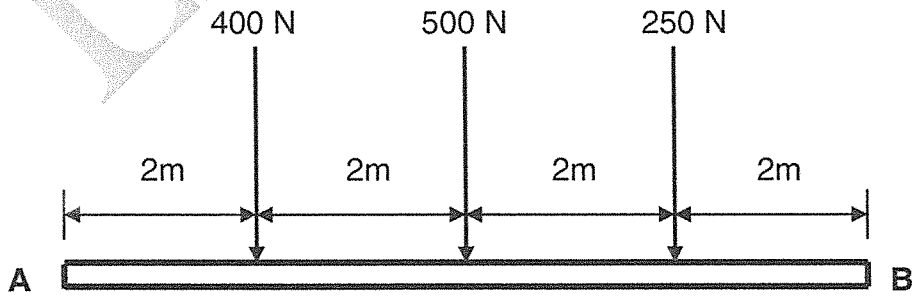

FIGURE 4

ENGINEERING

FORMULA SHEET

Any applicable formula may also be used.

1. $F = m \times g$

2. $\sin\theta = \frac{O}{S}$

$\sin\theta = \frac{T}{S}$

3. $\cos\theta = \frac{A}{H}$

$\cos\theta = \frac{A}{S}$

4. $\tan\theta = \frac{O}{A}$

$\tan\theta = \frac{T}{A}$

5. $A = \frac{\pi D^2}{4} = \pi r^2$

6. $A = \frac{1}{2}(B \times h)$

7. $V = \frac{\pi D^2}{4} \times h$

8. $V = \frac{4}{3}\pi r^3$

9. $V = \frac{1}{3}\pi r^2 h$

10. $D = \frac{M}{V}$

11. $R.D. = \frac{M.S}{M.W}$

$= \frac{D.S}{DW}$

12. $K = C + 273$

13. $VC / VK = F \cos\theta$

14. $HC / HK = F \cos\theta$

15. $V = L \times B \times H$

16. $\%MC = \frac{IW - DW}{DW} \times 100$

$\%VI = \frac{AG - DG}{DG} \times 100$

17. $P = h \times d \times g$

18. (Water- cement ratio)/ (Water – sementverhouding)

$W.C.R. = \frac{M.W}{M.C}$

$W.S.V = \frac{M.W}{M.S}$

19. $R^2 = VC^2 + HC^2$

$R^2 = VK^2 + HK^2$

20. $W = P \times V \times g$

$G = P \times V \times g$

21. $W = m \times g$

22. $P_1V_1 = P_2V_2$

ENGINEERING

Copyright reserved

higher education & training

Department:
Higher Education and Training
REPUBLIC OF SOUTH AFRICA

MARKING GUIDELINE

NATIONAL CERTIFICATE

APRIL EXAMINATION

BUILDING SCIENCE N1

2 APRIL 2015

This marking guideline consists of 9 pages.

Copyright reserved

QUESTION 1

1.1 Kilogram kg✓

1.2 Pascal Pa✓

1.3 Newton N✓

1.4 Pascal Pa✓

1.5 Kilogram per cubic metre kg/m^3✓

(5 x 1) **[5]**

QUESTION 2

2.1

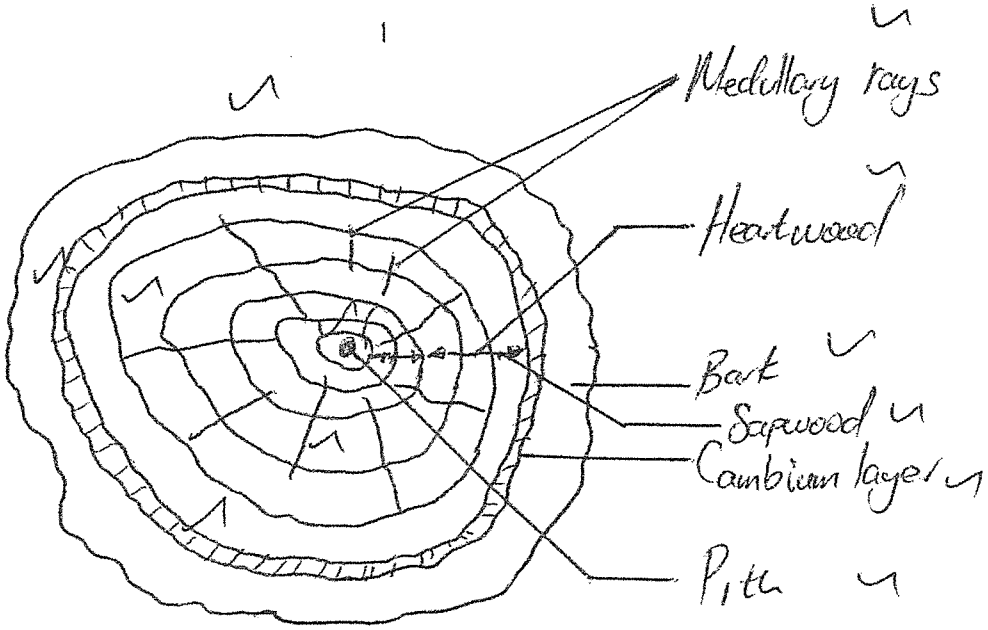

(6)

2.2 2.2.1 Seasoning consists of the drying out of a certain amount of moisture from the cells and cell walls. ✓✓

2.2.2 The process of sawing logs into planks and boards. ✓✓

2.2.3 The poisoning of wood on which fungi and insects lives. ✓✓

(3 x 2) (6)

2.3 $Volume = 1\ x\ b\ x\ h$ ✓

$= 5{,}6\ x\ 0{,}095\ x\ 0{,}125\ m$ ✓

$= 0{,}07\ m^3$ ✓

$Density = \dfrac{mass}{volume}$ ✓

$= \dfrac{54{,}5}{0{,}07}$ ✓ $or\ \dfrac{54{,}5}{0{,}067}$

✓

$778{,}57\ kg/m^3\ or\ 813{,}43\ kg/m^3$ (6)

[18]

QUESTION 3

3.1 The volume of a gas varies ✓ directly as its absolute temperature changes ✓ if the pressure is kept constant. ✓ (3)

3.2 $P_1\ V_1 = P_2\ V_2$

$300\ kPa\ x\ 5\ m^3 = P_2\ x\ 3\ m^3$ ✓

$P2 = \dfrac{300\ kPa\ \ x\ 5\ m^3}{3\ m^3}$ ✓

$= 500\ kPa$ ✓ (3)

3.3

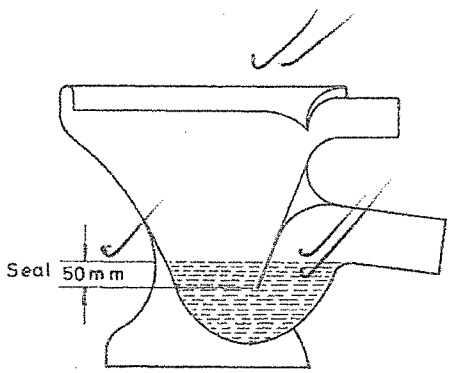

(5)

[11]

QUESTION 4

4.1 $W.S.V. \frac{M.W.}{M.S.} / W.C.R. = \frac{M.W.}{M.C.}$ ✓

$M.W. = W.C.R. X M.C.$ ✓

$= 0{,}04 \ x \ 100 \ kg$ ✓

$= 4 \ kg$ ✓

$= 4 \ litres / liters$ ✓ (4)

4.2

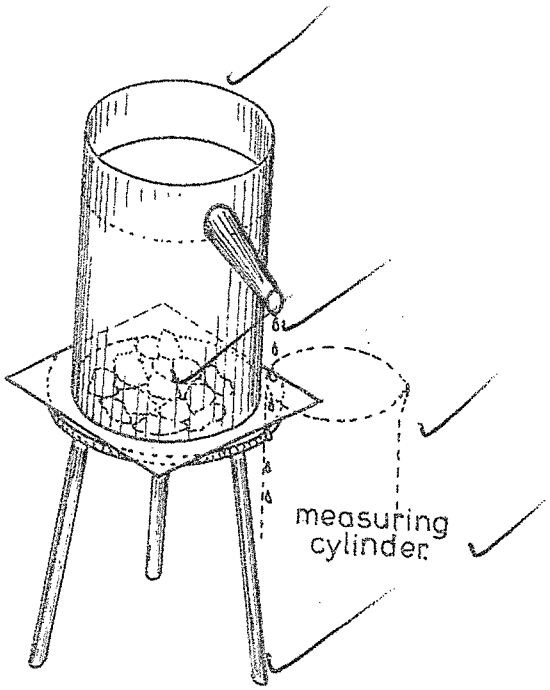

AIM
To find the volume of granite chips, applying the displacement of liquid method.

Apparatus
Eureka can
Measuring cylinder
Measuring scale
Granite chips

METHOD
Place the Eureka can on a tripod and fill it with water up to the spout. Place the measuring cylinder under the spout of the Eureka can and gently lower the granite chips into the water.

It will be noticed that the displaced water begins to run down the spout into the measuring cylinder. The quantity of displaced water is measured in the cylinder and noted down. This measurement will be volume of the chips. (6)

4.3

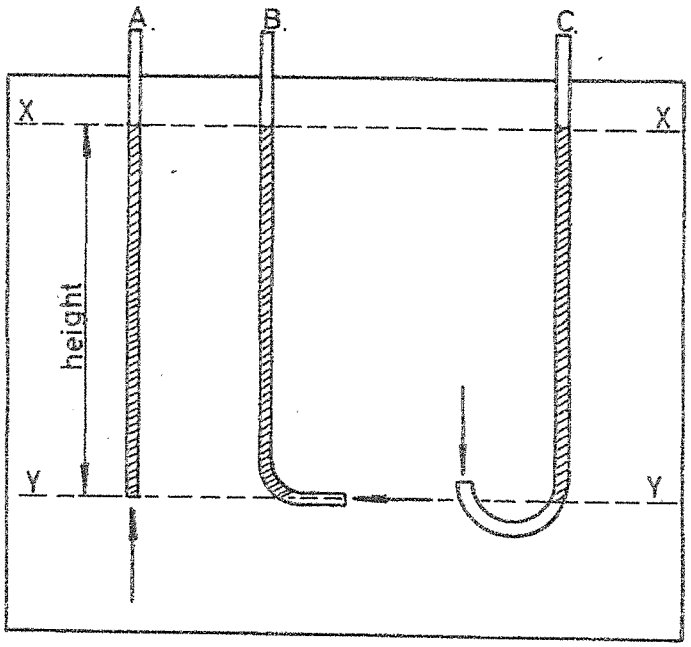

(2)

AIM
To proof that fluid pressure is the same in all directions (1)

APPARATUS
Three differently formed glass tubes open at both ends (manometers).
A large glass container filled with water. (1)

METHOD
Pour coloured liquid into the three glass tubes until the liquid is the same height in all three. Then place the tubes in the large glass container with water, so that their opening are all the same depth.

If the different height between X and Y is measured for each tubes, it will be found that it is the same in all three tubes. This proves that the upward, downward and sideways pressure in a liquid is the same at the same depth.

(2)
[16]

Copyright reserved

QUESTION 5

5.1 The numbering of the spaces between the lines of action ✓ in a system of forces. The numbering may be done clockwise or anti-clockwise ✓ around the point of allocation of the force. ✓ (3)

5.2 5.2.1 Magnitude = (4,5 x 1 000 N) – 2 450 N ✓
= 2 050 N ✓

Direction = left

5.2.2 Magnitude = 2 050 N ✓

Direction = right ✓

(2 x 2) (4)

5.3

$R^2 = VC^2 + HC^2$

$= (100)^2 + (80)^2$

$= \sqrt{10\,000 + 6\,400}$

$= 128{,}06$ N

DIRECTION: $\tan \Theta = \frac{VC}{HC}$

$= \frac{100}{80}$

$= 1{,}25$

$\Theta = \tan^{-1} 1{,}25$

$= 51{,}34°$ N of E (8)

5.4

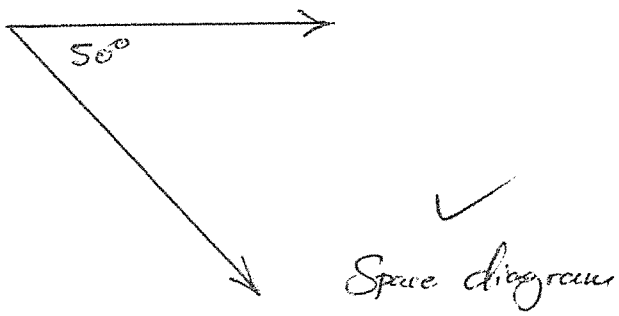

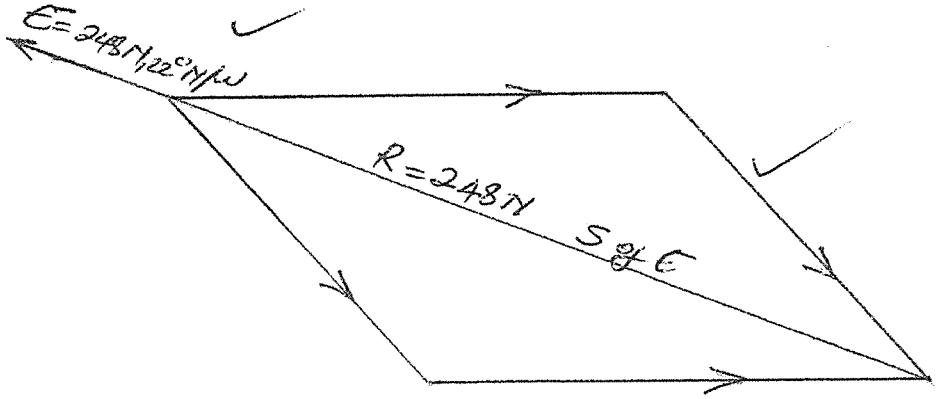

Equilibrant
Magnitude = 248 N
Direction = 22° N of W

Force diagram
Scale 10mm = 20N

(6)
[21]

QUESTION 6

6.1 A number of forces lying on the same plane are called coplanar forces. (2)

6.2

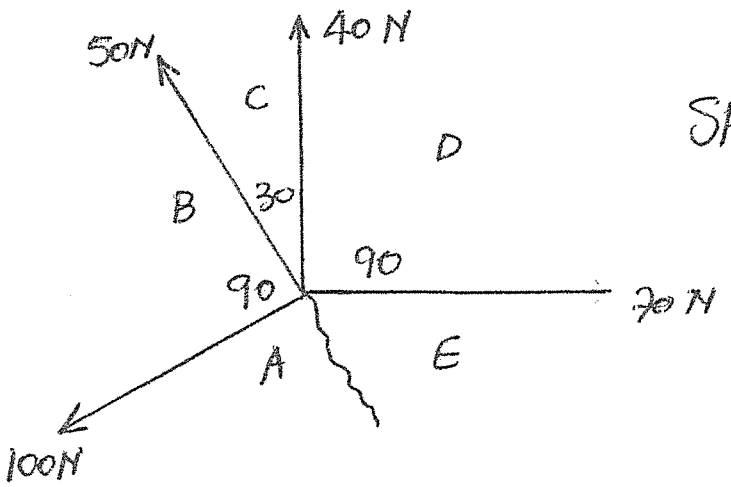

Space diagram

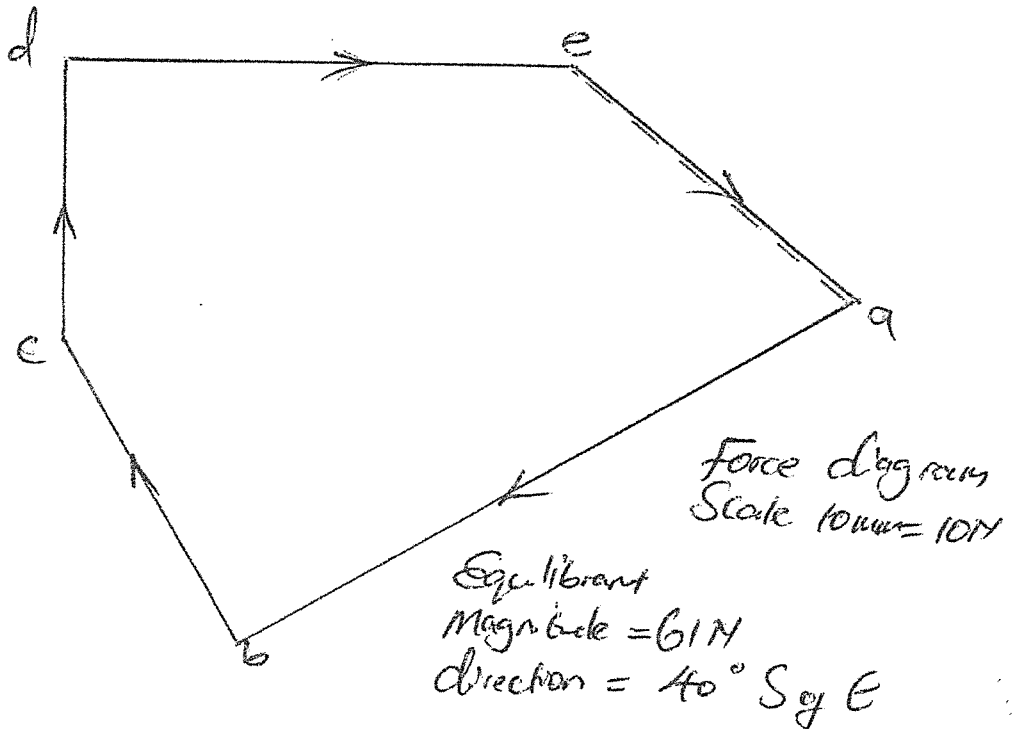
d
e
a
c
b
Force diagram
Scale 10mm = 10N
Equilibrant
Magnitude = 61N
direction = 40° S of E

(12)
[14]

QUESTION 7

7.1 2 400 kg x 10 = 24 000 N

Reaction force = $\frac{24\,000}{2}$ (concept of divide by 2)

= 12 000 N (3)

7.2

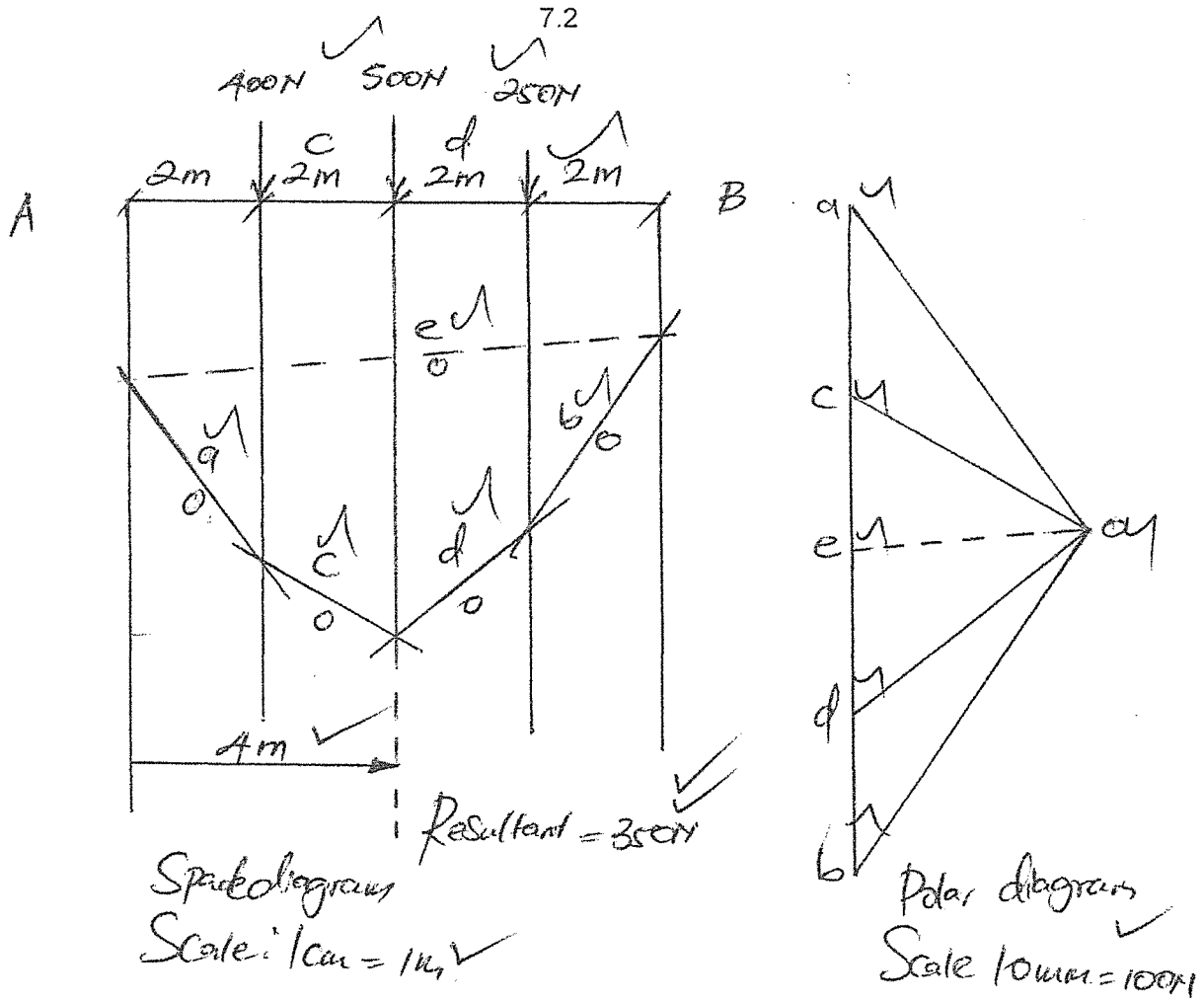

(12)
[15]

TOTAL: 100

Copyright reserved