higher education & training

Department:
Higher Education and Training
REPUBLIC OF SOUTH AFRICA

T180(E)(J28)T
AUGUST EXAMINATION

NATIONAL CERTIFICATE

BUILDING SCIENCE N1

(15070001)

28 July 2014 (Y-Paper)
13:00–16:00

Calculators may be used.

Candidates require drawing instruments.

This question paper consists of 5 pages, 1 addendum and 1 formula sheet.

ENGINEERING

Copyright reserved

DEPARTMENT OF HIGHER EDUCATION AND TRAINING
REPUBLIC OF SOUTH AFRICA

NATIONAL CERTIFICATE
BUILDING SCIENCE N1
TIME: 3 HOURS
MARKS: 100

INSTRUCTIONS AND INFORMATION

1. Answer ALL the questions.
2. Read ALL the questions carefully.
3. Number the answers according to the numbering system used in this question paper.
4. Rule off on completion of each answer.
5. ALL sketches and/or diagrams must be done in pencil and be neat, reasonably large and fully labelled.
6. Assume that a 1 kg mass exerts a force of 10 N.
7. Numerical answers are to be rounded off to TWO decimal places after the decimal comma.
8. Write the formula before starting with a calculation.
9. Write neatly and legibly.

ENGINEERING

Copyright reserved

QUESTION 1

1.1 Give *Charles's law.* (3)

1.2 A quantity of gas has a volume of 5 m^3 when at a pressure of 300 kilopascals.

Calculate the pressure when the gas occupies a volume of 3 m^3, while the temperature stays constant. (3)

1.3 Make a neat, sectional sketch of a water-closet with a U-shape bend in the pipe and clearly show the water seal on the sketch. (5)

[11]

QUESTION 2

2.1 Calculate the total quantity of water needed in a concrete mixture of 100 kg of cement with a water/cement ratio of 0,04.

The answer must be in litres. (4)

2.2 Describe, with the aid of a neat sketch, the displacement method of determining the volume of a small irregular solid of non-porous material. (6)

2.3 Sketch and describe a simple experiment to show that the down-, up- and sideward pressures at a point in a fluid are equal. (6)

[16]

QUESTION 3

3.1 Make a neat cross-sectional sketch of a tree trunk and label SIX different parts. (6)

3.2 Explain briefly the following terms as used in connection with timber:

3.2.1 Seasoning

3.2.2 Conversion

3.2.3 Preservation

(3 × 2) (6)

3.3 A timber beam, 5,6 m long, 95 mm wide and 125 mm deep, has a mass of 54,5 kg.

Calculate the density of the timber in kg/m^3. (6)

[18]

ENGINEERING

Copyright reserved

QUESTION 4

Give the name of the SI unit, and the symbol, in which each of the following is measured:

4.1 Mass of a body

4.2 Pressure in gas

4.3 Weight of a body

4.4 Atmospheric pressure

4.5 Density of material

(5 × 1) **[5]**

QUESTION 5

5.1 Explain the term *coplanar forces.* (2)

5.2 FIGURE 3 on the attached ADDENDUM shows four forces acting on a pin.

Determine graphically, and clearly show, the magnitude and direction of the equilibrant and also the magnitude of the horizontal and vertical components of the equilibrant. (12)

[14]

QUESTION 6

6.1 Explain the term *Bow's notation.* (3)

6.2 A 4,5 kN force is acting to the left and a force of 2 450 N is acting to the right along the same line of action.

State the magnitude and direction of the following:

6.2.1 The resultant force

6.2.2 The equilibrant force

(2 × 2) (4)

6.3 Calculate the magnitude and direction of the resultant of the two forces shown in FIGURE 1 (ADDENDUM - attached). State the angle between the resultant and the 80 N force.

(No marks will be allocated for a graphical solution.) (8)

6.4 Determine, by means of the parallelogram of forces, the magnitude and direction of the equilibrant of the concurrent coplanar forces shown in FIGURE 2 (ADDENDUM - attached). (6)

[21]

ENGINEERING

QUESTION 7

7.1 A concrete beam, 6 m long with a mass of 2 400 kg, is simply supported at either end.

Calculate the reaction force at each end of the beam. (3)

7.2 Determine, by means of the link polygon method, the position and magnitude of the resultant of the three forces acting on the beam A–B shown in FIGURE 4 (ADDENDUM – attached).

State clearly the direction of the resultant and the distance from the left-hand end A of the beam. (12)
[15]

TOTAL: 100

ENGINEERING

Copyright reserved

FORMULA SHEET

Any applicable formula may also be used.

1. $F = m \times g$

2. $\sin\theta = \frac{O}{}$

.

$\sin\theta = \frac{T}{S}$

3. $\cos\theta = \frac{A}{H}$

$\cos\theta = \frac{A}{S}$

4. $\tan\theta = \frac{O}{A}$

$\tan\theta = \frac{T}{A}$

5. $A = \frac{\pi D^2}{4} = \pi r^2$

6. $A = \frac{1}{2}(B \times h)$

7. $V = \frac{\pi D^2}{4} \times h$

8. $V = \frac{4}{3}\pi r^3$

9. $V = \frac{1}{3}\pi r^2 h$

10. $D = \frac{M}{V}$

11. $R.D. = \frac{M.S}{M.W}$

$= \frac{D.S}{DW}$

12. $K = C + 273$

13. $VC/VK = F \cos\theta$

14. $HC/HK = F \cos\theta$

15. $V = L \times B \times H$

16. $\%MC = \frac{IW - DW}{DW} \times 100$

$\%VI = \frac{AG - DG}{DG} \times 100$

17. $P = h \times d \times g$

18. (Water-cement ratio)/

$W.C.R. = \frac{M.W}{M.C}$

$W.S.V = \frac{M.W}{M.S}$

19. $R^2 = VC^2 + HC^2$

$R^2 = VK^2 + HK^2$

20. $W = P \times V \times g$

$G = P \times V \times g$

21. $W = m \times g$

22. $P_1V_1 = P_2V_2$

ENGINEERING

Copyright reserved

ADDENDUM

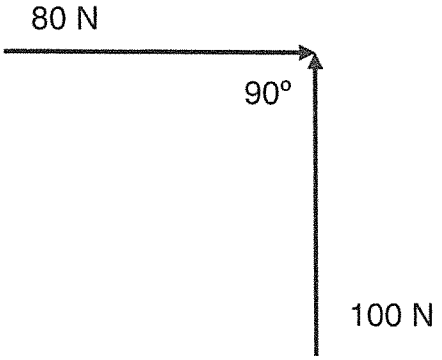

FIGURE 1

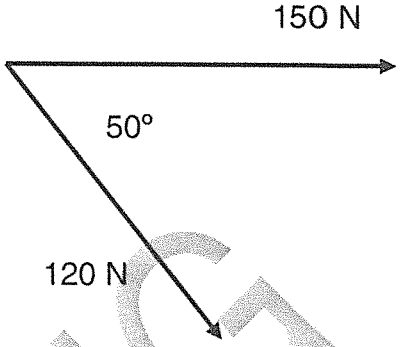

FIGURE 2

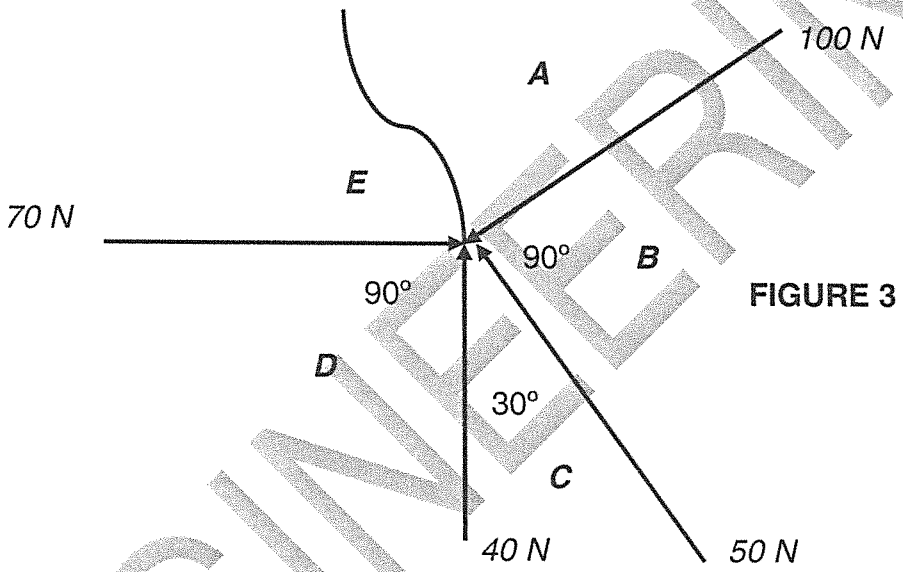

FIGURE 3

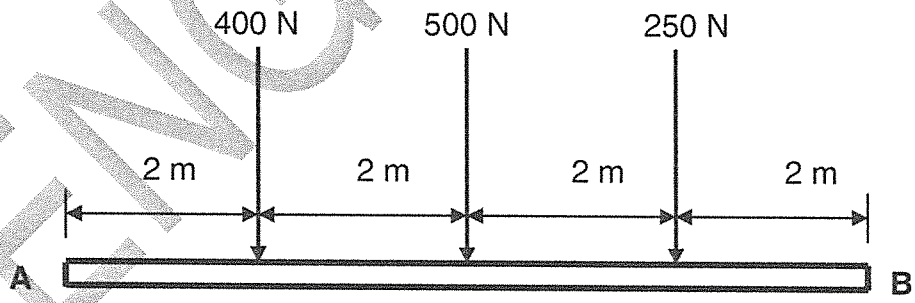

FIGURE 4

ENGINEERING

Copyright reserved

higher education & training

Department:
Higher Education and Training
REPUBLIC OF SOUTH AFRICA

MARKING GUIDELINE

NATIONAL CERTIFICATE

AUGUST EXAMINATION

BUILDING SCIENCE N1

28 JULY 2014

This marking guideline consists of 8 pages.

Copyright reserved

QUESTION 1

1.1 The volume✓ of a gas varies directly✓ as its absolute temperature changes, if the pressure is kept constant.✓ (3)

1.2

$$P_1 V_1 = P_2 V_2$$

$$300 \text{ kPa} \times 5 \text{ m}^3 = P_2 \times 3 \text{ m}^3 \checkmark$$

$$P_2 = \frac{300 \text{ kPa} \times 5 \text{ m}^3}{3 \text{ m}^3 \checkmark}$$

$$= 500 \text{ kPa}$$

(6 × ½) (3)

1.3

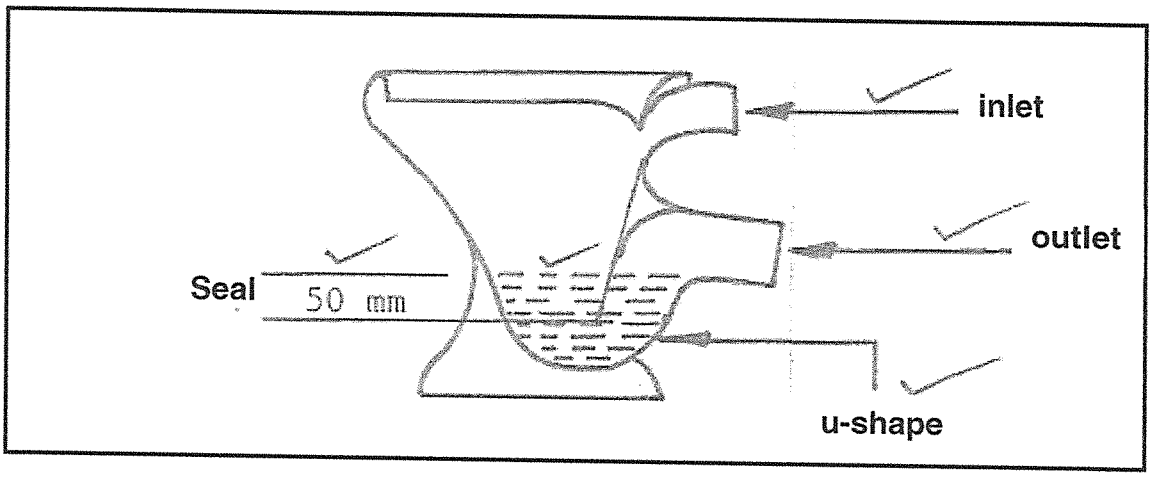

(5)
[11]

QUESTION 2

2.1 $\text{W.S.V.} = \frac{\text{M.W.}}{\text{M.S.}} / \text{W.C.R.} = \frac{\text{M.W.}}{\text{M.C.}}$

$$\text{M.W.} = \text{W.C.R.} \times \text{M.C.}\checkmark$$

$$= 0{,}04 \times 100 \text{ kg}$$

$$= 4 \text{ kg}$$

$$= 4 \text{ litres/liter}$$

(4)

Copyright reserved

2.2

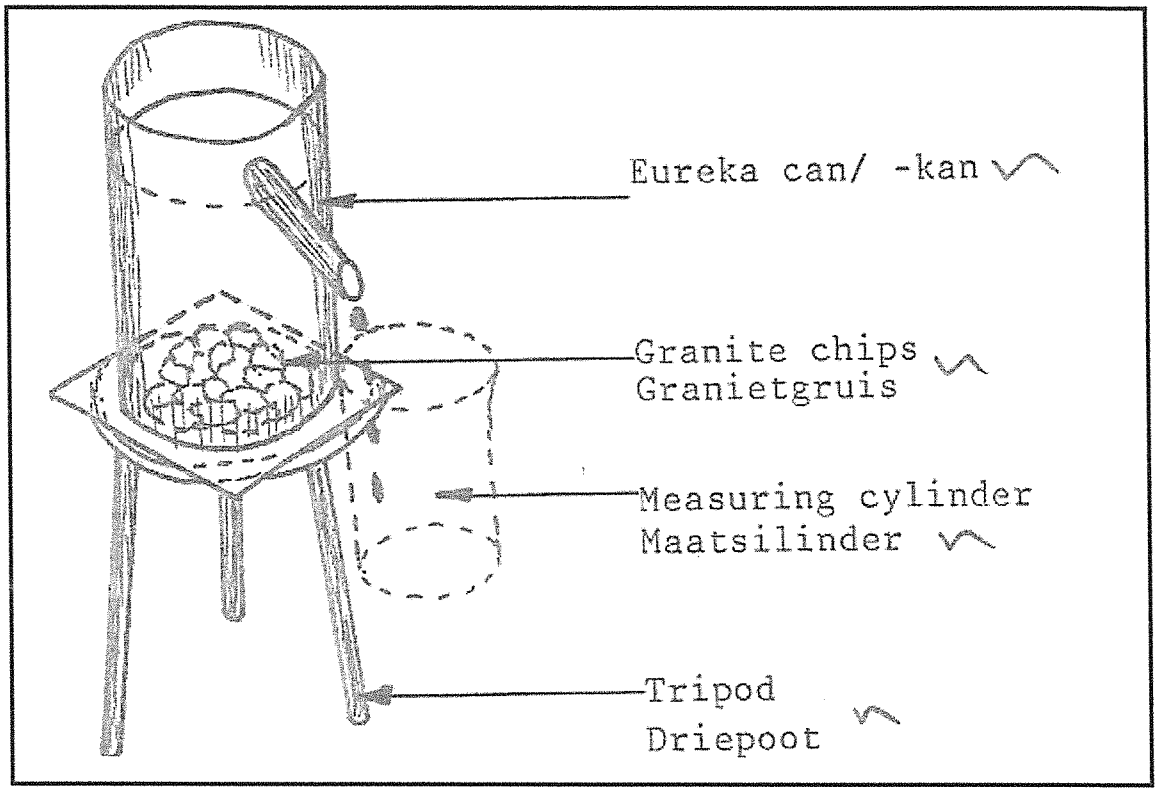
Eureka can/ -kan
Granite chips
Granietgruis
Measuring cylinder
Maatsilinder
Tripod
Driepoot

(6)

2.3

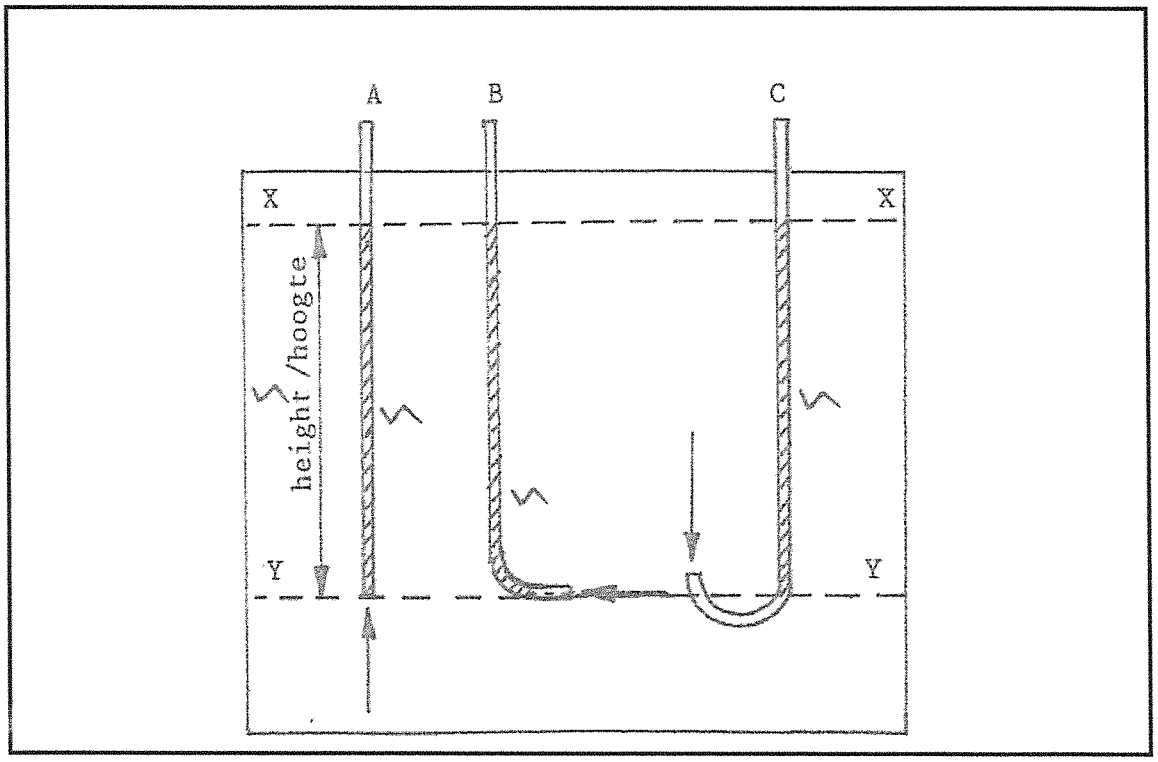
A
B
C
X
X
height /hoogte
Y
Y

AIM
To prove that fluid pressure is the same in all directions.√

APPARATUS√
Three differently formed glass tubes open at both ends (manometers)
A large glass container filled with water√

METHOD
Pour coloured liquid into the three glass tubes√ until the liquid is the same height in all three. Then place the tubes in the large glass container with water, so that their openings are all the same depth.√
If the difference in height between X and Y is measured for each tube,√ it will be found that it is the same in all three tubes√. This proves that the upward, downward and sideways pressure in a liquid is the same at the same depth.√ (6)
[16]

QUESTION 3

3.1

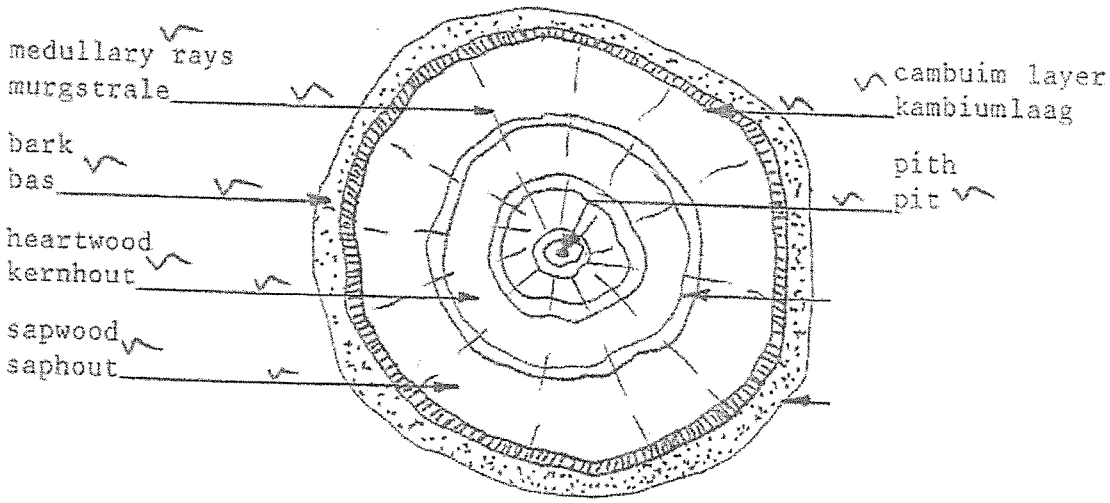

(6)

3.2 3.2.1 Seasoning consists of the drying out√ of a certain amount of moisture from√ the cells and cell walls√.

3.2.2 The process of sawing logs√ into planks√ and boards√.

3.2.3 Poisoning√ of wood√ on which fungi√ and insects√ live

(3 × 2) (6)

3.3 Volume = l × b × h√
= 5,6√ × 0,095√ × 0,125 m√
= 0,07√ m^3√

Density = $\frac{\text{mass}}{\text{volume}}$√
= $\frac{54,5}{0,07}$√ or $\frac{54,5}{0,067}$
= 778,57√ kg/m^3√ or 813,43 kg/m^3

(12 × ½) (6)
[18]

QUESTION 4

4.1 kilogram kg
4.2 pascal Pa
4.3 newton N
4.4 pascal Pa
4.5 kilogram per cubic metre kg/m^3

(5 × 1) **[5]**

QUESTION 5

5.1 A number of forces✓ lying on the same plane✓ are called coplanar forces (2)

5.2

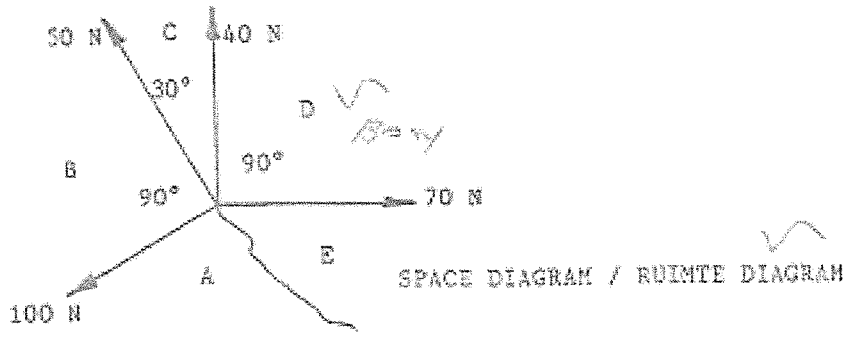

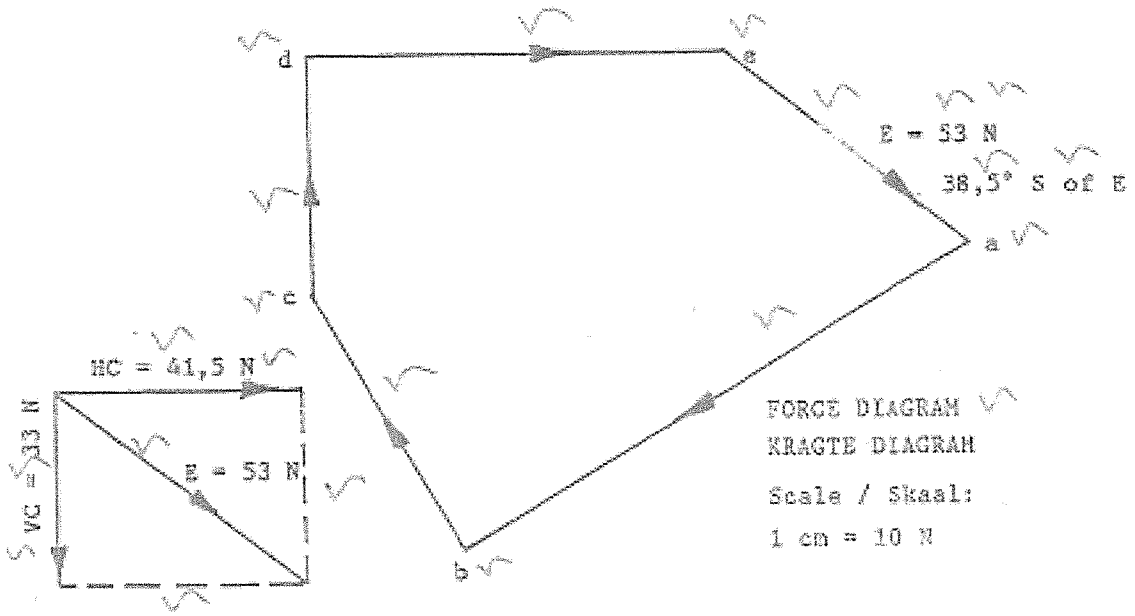

(12)
[14]

QUESTION 6

6.1 The numbering√ of the spaces√ between the lines of action in a system of forces√. The numbering may be done clockwise√ or anti-clockwise√ around the point of application√ of the force. (6 × ½) (3)

6.2 6.2.1 Magnitude = (4,5 x 1 000 N)√ – 2 450 N√ OR 4,5 – (2 450 ÷ 1 000)
= 2 050 N√ = 2,05 kN

Direction = left✓

6.2.2 Magnitude = 2 050 N√ or 2,05 kN
Direction = right✓

(4)

6.3 $R^2 = VC^2 + HC^2$ √

$= (100)^2$ √ $+ (80)^2$ √

$= \sqrt{10\,000 + 6\,400}$ √√

$= 128{,}06$ N √√

DIRECTION: $\tan\theta = \frac{VC}{HC}$ √

$= \frac{100}{80}$ √√

$= 1{,}25$ √

$\theta = \tan^{-1} 1{,}25$ √

$= 51{,}34°$ √ N√ or E√

(16 × ½) (8)

6.4

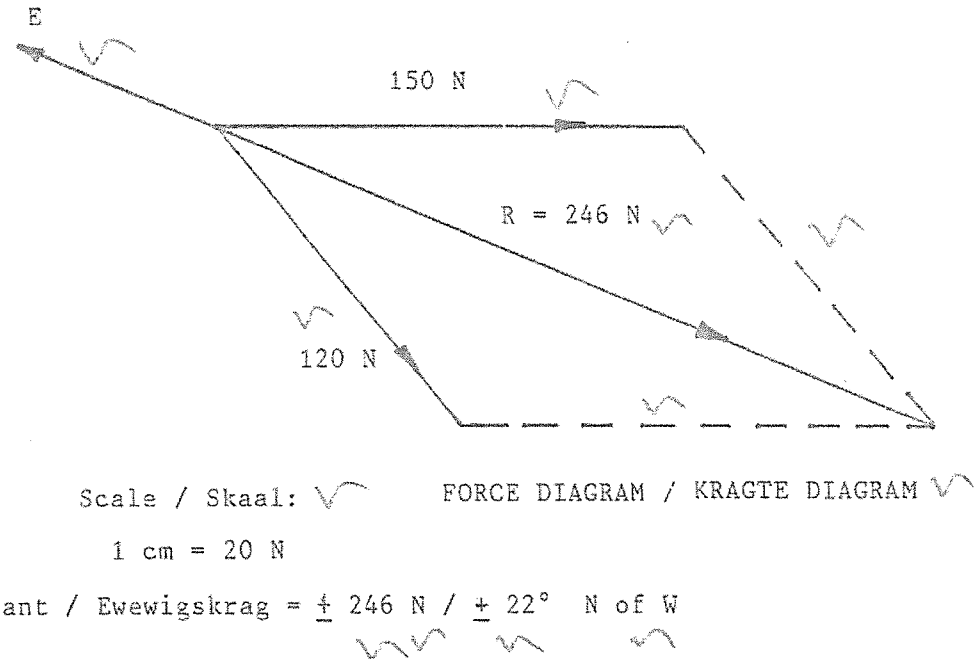

(6)
[21]

QUESTION 7

7.1 2 400 kg x 10 = 24 000 N✓

Reaction force = $\frac{24\,000\checkmark}{2\checkmark}$ (concept of divide by 2)

✓ ✓

= 12 000 N (3)

7.2

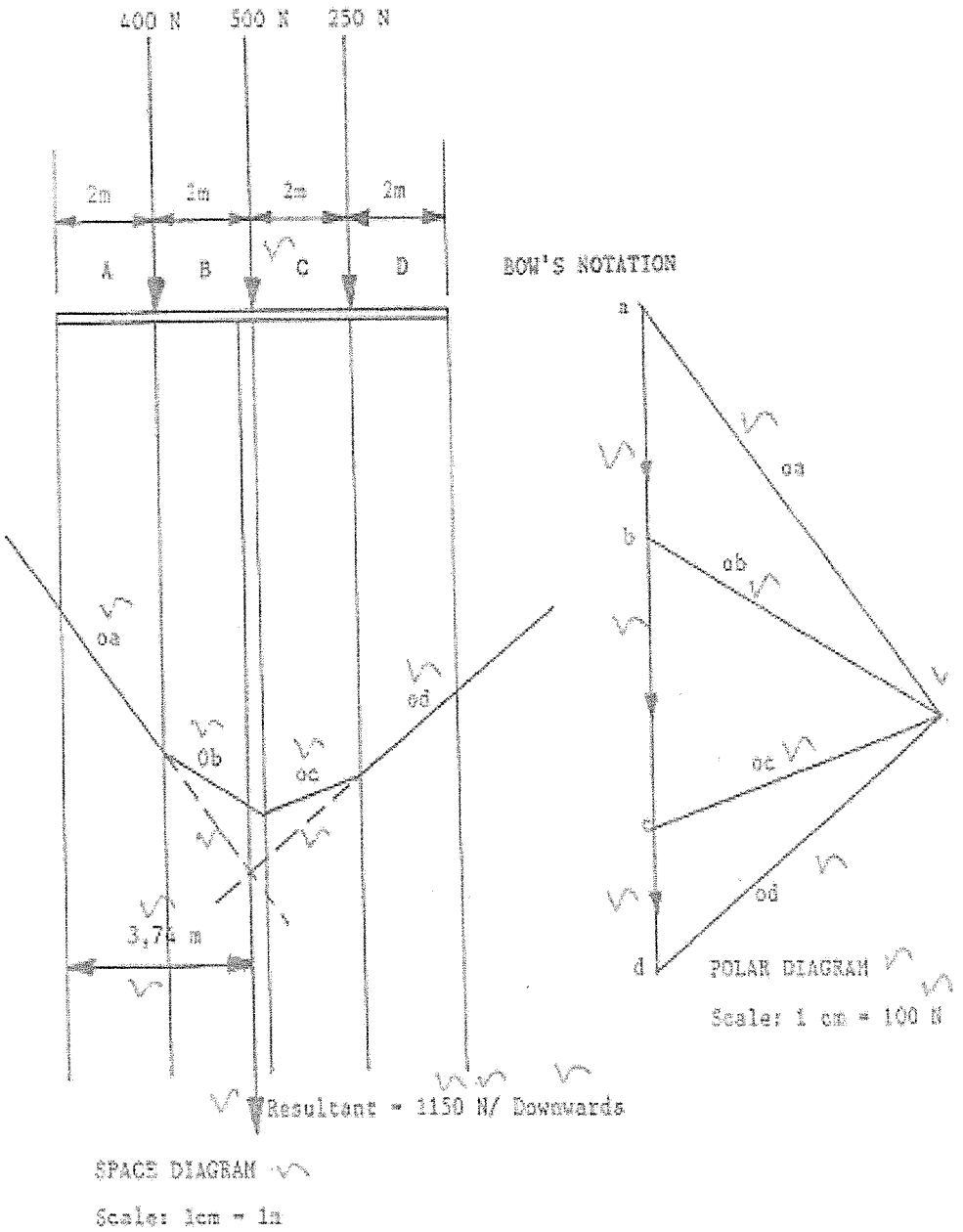

(12)

[15]

TOTAL: 100

Copyright reserved