higher education & training

Department:
Higher Education and Training
REPUBLIC OF SOUTH AFRICA

T550(E)(J28)T
AUGUST EXAMINATION

NATIONAL CERTIFICATE

ENGINEERING SCIENCE N1

(15070391)

28 July 2014 (Y-Paper)
13:00–16:00

This question paper consists of 10 pages and 1 formula sheet.

ENGINEERING

Copyright reserved

DEPARTMENT OF HIGHER EDUCATION AND TRAINING
REPUBLIC OF SOUTH AFRICA

NATIONAL CERTIFICATE
ENGINEERING SCIENCE N1
TIME: 3 HOURS
MARKS: 100

INSTRUCTIONS AND INFORMATION

1. Answer ALL the questions.
2. Read ALL the questions carefully.
3. Number the answers according to the numbering system used in this question paper.
4. Write neatly and legibly.

ENGINEERING

QUESTION 1

1.1 Identify the following as a vector or scalar.

1.1.1 Mass

1.1.2 Weight

1.1.3 Displacement

1.1.4 Speed

(4 × ½) (2)

1.2 A body falls from a height of 60 m; it takes 3,5 seconds to hit the ground.

1.2.1 Use a scale of: 2 cm = 1 s and 1 cm = 5 m and draw a displacement/time graph of the falling object. (3)

Use the graph in QUESTION 1.2.1 and calculate the following:

1.2.2 The gradient of the graph

1.2.3 The velocity the body hits the ground

(2 × 1) (2)

ENGINEERING

1.3 A traveller travelled from A to B according to the route in FIGURE 1. The route took 1 hour to complete.

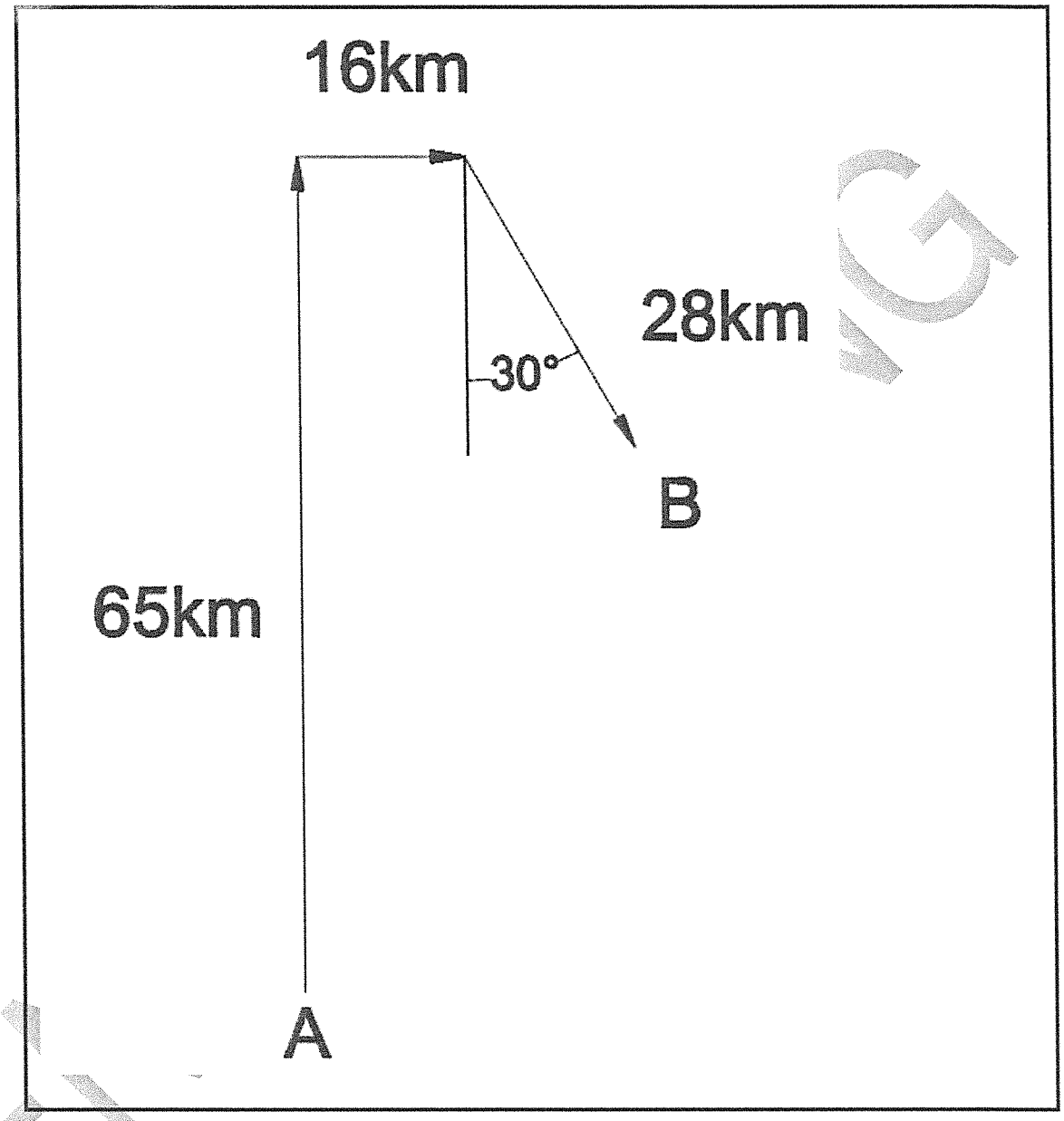

FIGURE 1

Calculate the following:

1.3.1 The distance travelled from A to B (1)

1.3.2 The displacement between A and B by means of vector adding (3)

1.4 Two forces are acting on a point. The one force (A) is 160 N North, the other force (B), is 120 N South.

Calculate the size and direction of the force that will keep the system of forces in equilibrium. (3)

[14]

QUESTION 2

2.1 Define the following:

2.1.1 Mechanical advantage

2.1.2 Law of moments

2.1.3 Displacement ratio

2.1.4 Equilibrant

(4 × 1) (4)

2.2 FIGURE 2 shows a system of forces:

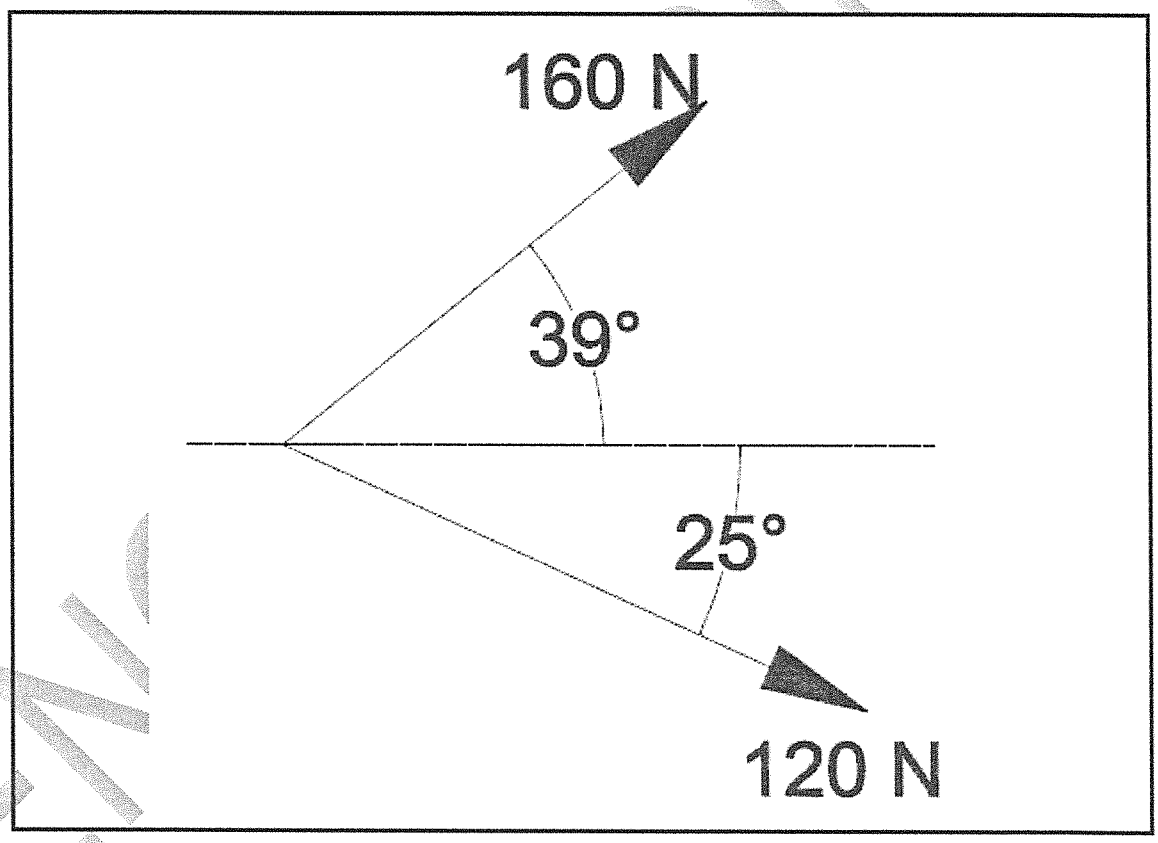

FIGURE 2

Determine the following by using the parallelogram of forces method.(Use a scale of 20 N 1 cm)

2.2.1 Resultant (2)

2.2.2 Equilibrant (1)

Copyright reserved

2.3 Complete the following sentences by using the words provided in the list below. Write only the word next to the question number (2.3.1–2.3.5 in the ANSWER BOOK. Each word can only be used ONCE.

clockwise; rest; resultant; equilibrant; effort; load; anti-clockwise

A force can cause an object that is moving to come to (2.3.1 ...). A (2.3.2 ...) is that force that will replace two or more forces. Displacement ratio is the ratio between the distance the (2.3.3 ...) has moved and the distance the (2.2.4 ...) has moved. The law of moments states that if a system is in equilibrium the sum of the (2.3.5 ...) moments is equal to the sum of the (2.3.6 ...) moments about the same point. (3)

2.4 A lever was used to raise a load of 360 kg. The effort applied was 450 N and it moved through a distance of 1,12 m. The distance the load travelled was 320 mm.

Calculate:

2.4.1 The mechanical advantage

2.4.2 The velocity ratio

(2 × 1) (2)

2.5 Calculate the magnitude of force F in FIGURE 3.

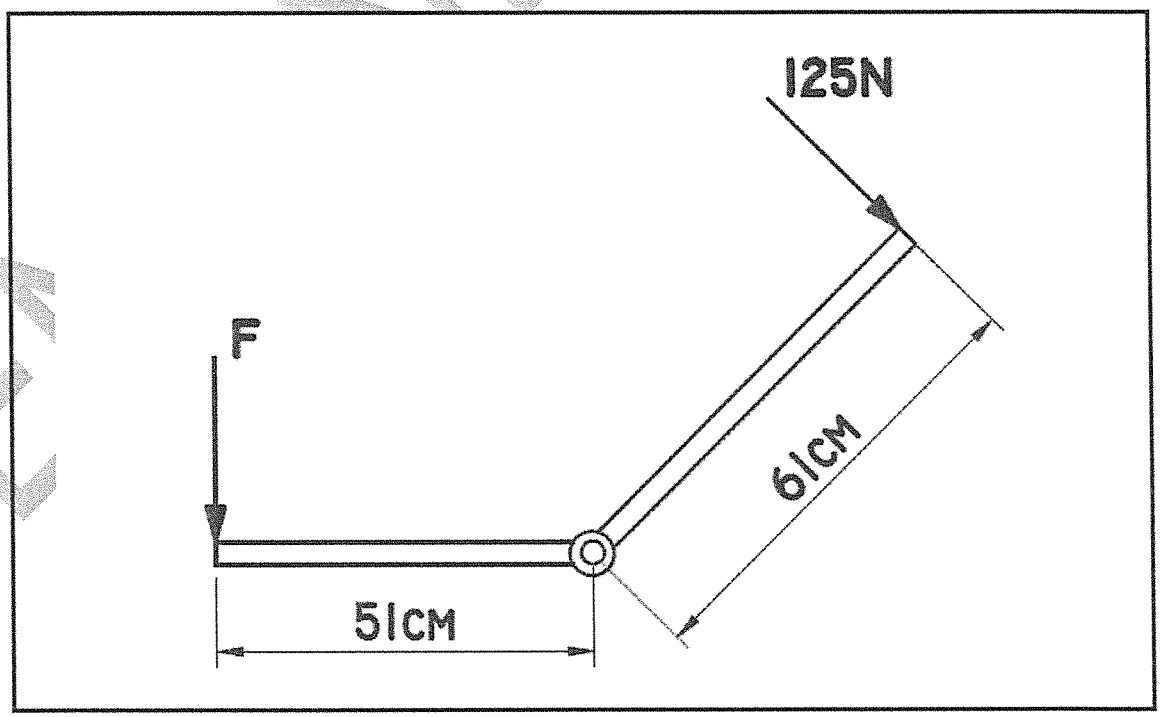

FIGURE 3 (3)

Copyright reserved

2.6 FIGURE 4 shows a signboard with a weight of 500 N.

Determine with the aid of a vector diagram the force B in the cable and force A in the wire.

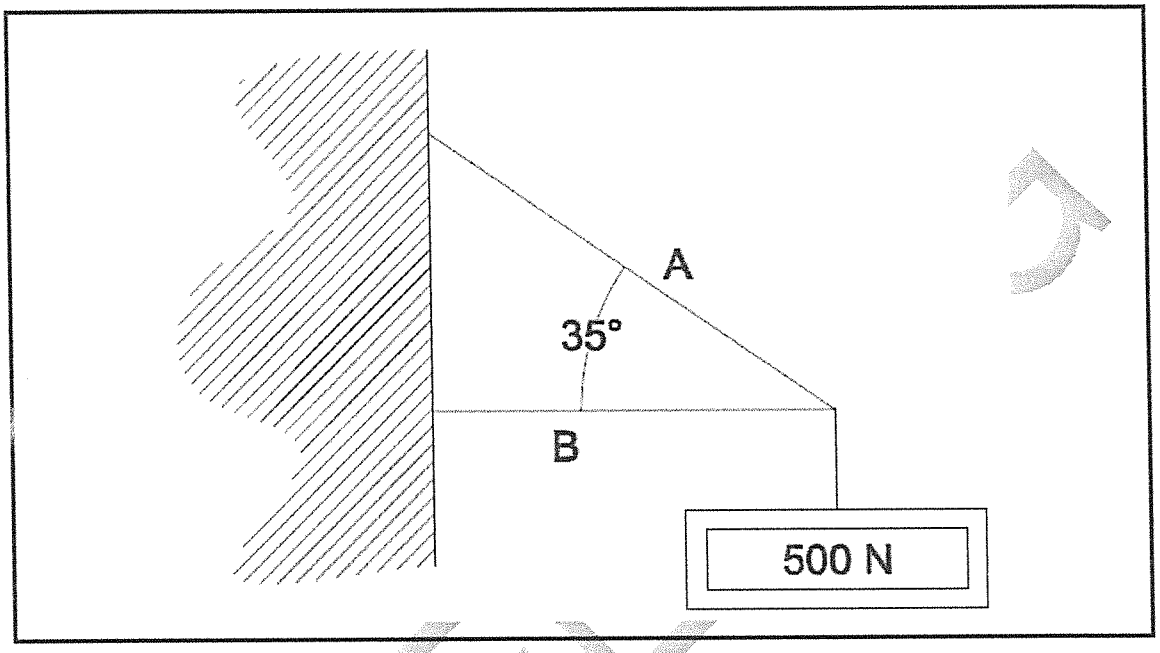

FIGURE 4

(3)
[18]

QUESTION 3

3.1 Choose a description from COLUMN B that matches a/an word/item in COLUMN A. Write only the letter (A–H) next to the question number (3.1.1–3.1.5) in the ANSWER BOOK.

COLUMN A	COLUMN B
3.1.1 Heat energy	A the ability to do work by means of splitting atoms of matter
3.1.2 Energy	B bullet travelling at high speed
3.1.3 Work	C product of force on oject and the distance moved by objects
3.1.4 Power	D work done due to its position
3.1.5 Kinetic energy	E work done by burning wood
	F rate of work done
	G ability to do work
	H the straight line in which an object moves between two points

(5 × ½) (2½)

Copyright reserved

3.2 A body with a mass of 38 kg is raised 11 m vertically in 2 minutes. Use a scale of 1 cm = 30 N and 1 cm = 1 m.

3.2.1 Draw the force/distance graph. (3½)

3.2.2 Calculate from the graph the work done in raising the body to the top. (2)

3.2.3 Calculate from the graph the work done in raising the body the first 5 metres. (2)

3.2.4 Calculate the power developed to the top. (2)
[12]

QUESTION 4

4.1 Describe the difference between *heat* and *temperature*. (2)

4.2 What liquid would you expect to find in a:

4.2.1 Swimming-pool thermometer

4.2.2 Cooking thermometer

(2 × 1) (2)

4.3 Does the temperature of a substance always rise when heat is added to it? (1)

4.4 The mass of steel component is 12,5 kg.

Calculate the amount of heat energy required to change its temperature from 50 °C to 500 °C if the specific heat capacity of the steel is 0,486 kJ/kg °C. (2)

4.5 On what principle does a bimetal strip operate? (1)

4.6 When a steel pipe of length of 125,3 m is heated, its length increases by 102 mm.

Calculate the final length of the pipe. (2)

4.7 Name THREE ways in which heat transfer can take place. (3)

4.8 Give ONE example of each method of heat transfer mentioned in QUESTION 4.7. (3)

4.9 Describe, with the aid of a sketch, an experiment to prove heat propagation by conduction. (3)
[19]

ENGINEERING

QUESTION 5

5.1 What is the smallest particle into which a specific substance be divided without changing its identity? (1)

5.2 What do you understand by an *ion*? (1)

5.3 Name THREE phases in which matter can exist. (3)

5.4 5.4.1 Which substance can easily be changed into each of the three-phases and back again? (1)

5.4.2 Give ONE example of each phase of matter. (3)

5.5 Compare the motion of particles within different phases of matter. (3)
[12]

QUESTION 6

6.1 Group the following as conductors and insulators:

Carbon, PVC, plastic, iron, aluminium and bakelite. (3)

6.2 Draw the symbols of the following in a circuit:

6.2.1 Cell

6.2.2 Battery

6.2.3 Variable resistor

6.2.4 Switch

(4 × 1) (4)

6.3 Calculate the current that will flow through the element of an electric iron with a resistance of 120 Ω if it is connected to a 220 V supply. (2)

6.4 Three resistors of 7 Ω, 11 Ω and 21 Ω respectively are connected in series across a 12 V supply.

Calculate:

6.4.1 Total resistance of the combination

6.4.2 The current flow through the circuit

6.4.3 The energy used in 5 minutes

(3 × 1) (3)

ENGINEERING

6.5 What will happen to the resistance of the following substances if the temperature increases?

6.5.1 Brass

6.5.2 PVC

6.5.3 Copper

(3 × 1) (3)

6.6 Define the following:

6.6.1 Resistivity

6.6.2 Fleming's right-hand rule

6.6.3 Ohm's law

6.6.4 Alternating current

(4 × 1) (4)

6.7 Draw the magnetic field lines around a solenoid. Label the diagram. (3)

6.8 Draw a neat-labelled sketch of a single stroke electric bell. (3)

[25]

TOTAL: 100

ENGINEERING

Copyright reserved

ENGINEERING SCIENCE N1

FORMULA SHEET

Any applicable formula may also be used.

1. $v = \frac{s}{t}$
2. $F = m.g$
3. $DR = \frac{E_{dist.}}{L_{dist.}}$ $VV = \frac{M_{afst.}}{L_{afst.}}$
4. $MA = \frac{L}{E}$ $HV = \frac{L}{M}$
5. $VR = \frac{D}{d}$ $SV = \frac{D}{d}$
6. $MOMENT = F.s$
7. $T = F.R$
8. $W = F.S$
9. $P = \frac{W}{t}$
10. $P = F.v$
11. $Q = m.c.\Delta t$
12. $L_f = L_o + \Delta L$
13. $L_f = L_o - \Delta L$
14. $P = V.I$
15. $P = I^2.R$
16. $P = \frac{V^2}{R}$
17. $Q = P.t$
18. $I = \frac{V}{R}$
19. $R_t = R_1 + R_2 \ldots$
20. $\frac{1}{R_t} = \frac{1}{R_1} + \frac{1}{R_2} \ldots$

ENGINEERING

Copyright reserved

higher education & training

Department:
Higher Education and Training
REPUBLIC OF SOUTH AFRICA

MARKING GUIDELINE

NATIONAL CERTIFICATE

AUGUST EXAMINATION

ENGINEERING SCIENCE N1

28 JULY 2014

This marking guideline consists of 9 pages.

Copyright reserved

QUESTION

1.1 1.1.1 Scalar

1.1.2 Vector

1.1.3 Vector

1.1.4 Scalar (2)

1.2 1.2.1

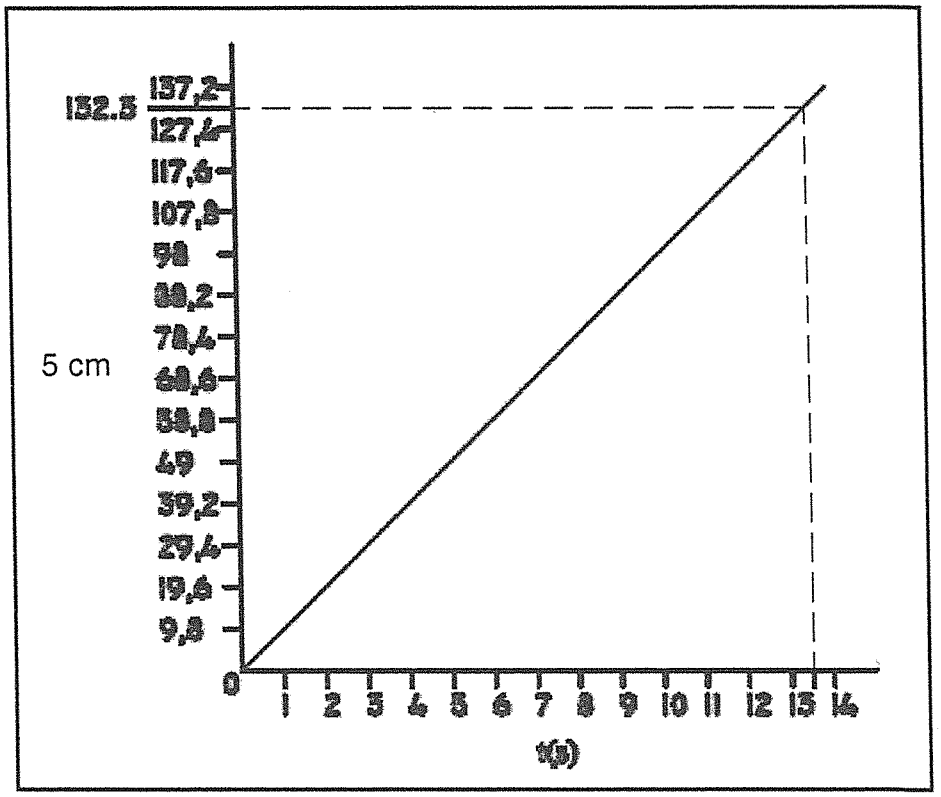

(3)

1.2.2

$$gradient = \frac{s}{t}$$

$$gradient = \frac{60}{3,5}$$

$$gradient = 1,714\ m/s$$ (1)

1.2.3 V = 1,714 m/s (1)

1.3 1.3.1 $s = 65 + 16 + 28$

$s = 109\ km$ (1)

1.3.2

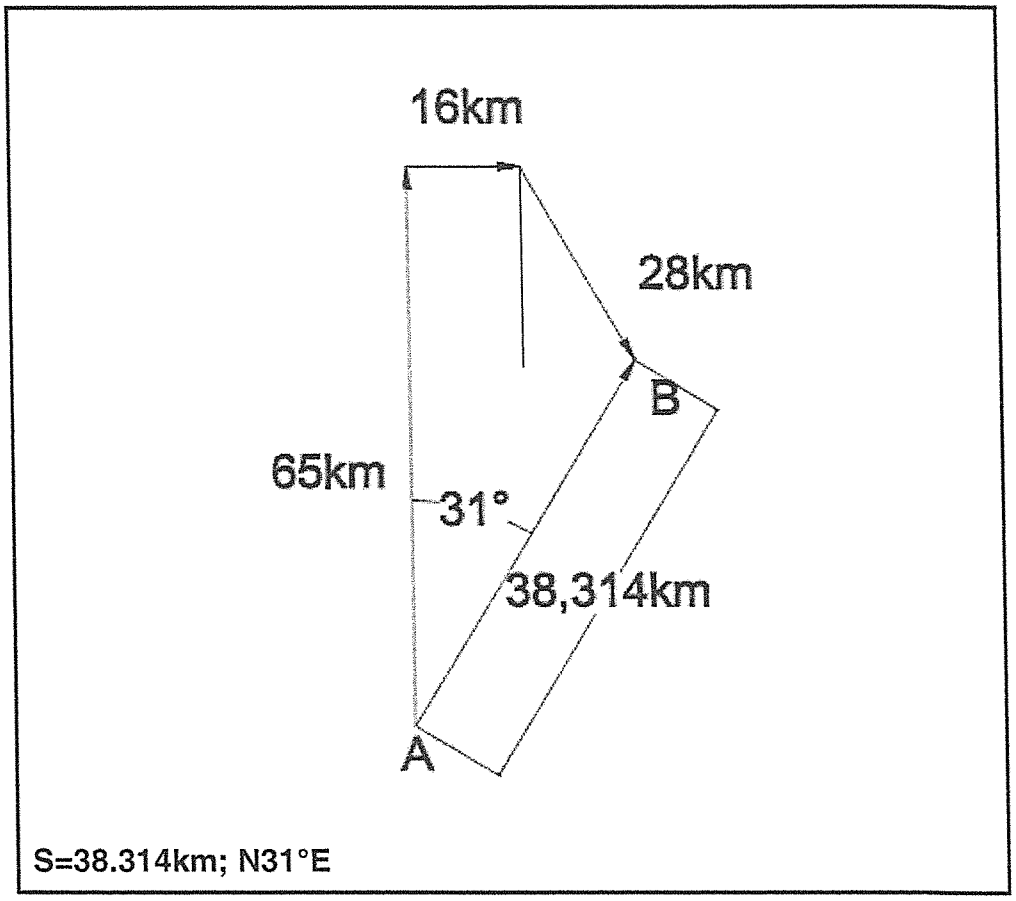

(3)

1.4

(3)
[14]

QUESTION 2

2.1 2.1.1 Mechanical advantage is the ratio of the load overcome as opposed to the corresponding effort applied.

2.1.2 A system of forces is in equilibrium when the sum of the clockwise moments is equal to the sum of the anticlockwise moments.

2.1.3 The ratio of the distance moved by the effort as opposed to the distance the load has moved.

2.1.4 The single force which that brings a system of forces in equilibrium.
(4 × 1) (4)

2.2

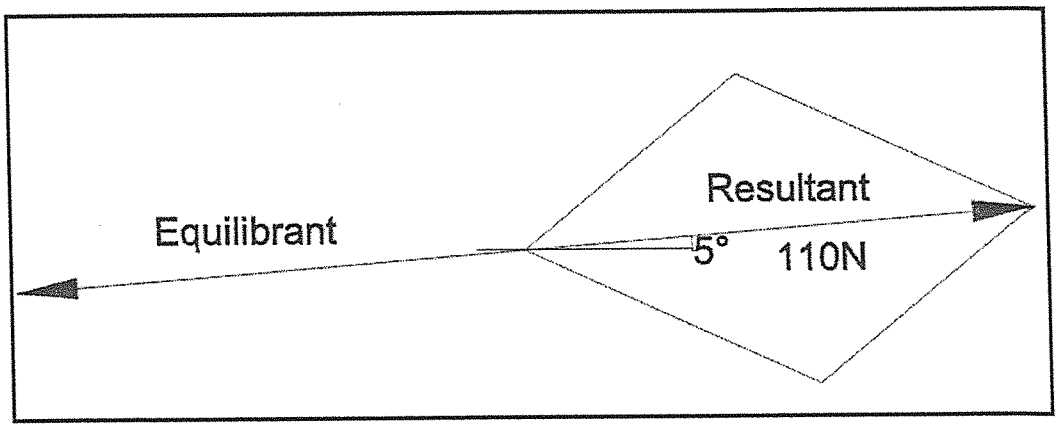

2.2.1 110N; E 5°N R = 5,5 cm = 110 N (2)

2.2.2 110N; W 5°S E = 5,5 cm = 110 N (1)

2.3 2.3.1 Rest

2.3.2 Resultant

2.3.3 Effort

2.3.4 Load

2.3.5 Clockwise/Anti-clockwise

2.3.6 Anti-clockwise/Clockwise (3)

2.4 2.4.1

$$MA = \frac{L}{E}$$

$$MA = \frac{360 \times 9.8}{450}$$

$$\underline{MA = 7{,}84}$$ (1)

2.4.2

$$VR = \frac{E_{dist}}{L_{dist}}$$

$$VR = \frac{1{,}12}{0{,}32}$$

$$\underline{VR = 3.5}$$ (1)

2.5

$$CWM = ACWM$$

$$125 \times 61 = F \times 51$$

$$F = \frac{7625}{51}$$

$$\underline{F = 149{,}51N}$$ (3)

2.6

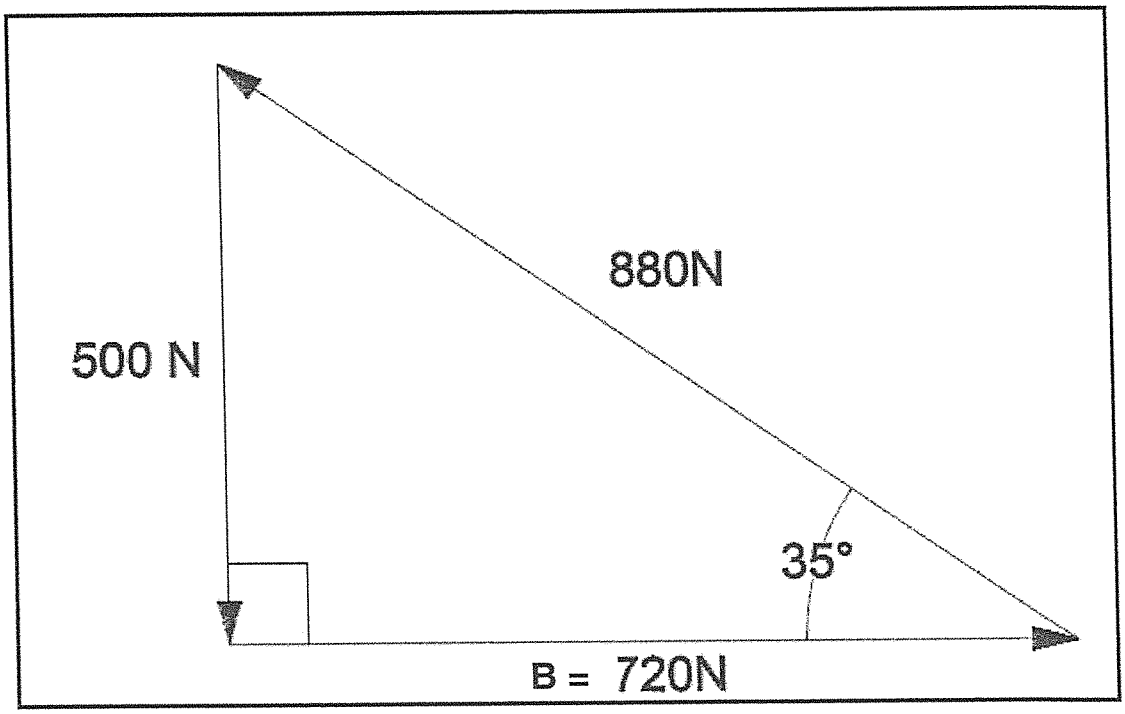

(3)
[18]

QUESTION 3

3.1 3.1.1 E
3.1.2 G
3.1.3 C
3.1.4 F
3.1.5 B

(5 × ½) (2½)

3.2 $m = 38\ kg$ $F = 38 \times 9{,}8 = 372{,}4\ N$
$s = 11\ m$
$t = 2\ \text{min}$ 120 sec

3.2.1 A graph of force/distance must be supplied (3½)

3.2.2 $W = L \times B$
$W = 372{,}4 \times 11$ √ Subt. one mark // answer one mark
$W = 4096{,}4\ J\ //\ 4{,}096\ kJ$ (2)

3.2.3 $W = L \times B$
$W = 372{,}4 \times 5$ √ Subt. one mark // answer one mark
$W = 1\,862\ J\ //\ 1{,}862\ kJ$ (2)

3.2.4 $P = \frac{W}{t}$
$P = \frac{4096{,}4}{120}$ √ Subt. one mark // answer one mark
$p = 34{,}137\ W$ √ (2)
[12]

QUESTION 5

5.1 Atom√ (1)

5.2 Positively or negatively charge substance√ (1)

5.3 Solid√
Liquid√
Gases√ (3)

5.4 Water√
Solid: Ice√
Liquid: Water√
Gases: Steam√ (4)

Copyright reserved

5.5 Solids:
The particles are close to one another. √
Movement very slow.

Liquids:
The particles are a little further apart. √
Movement within liquid is fast.

Gases:
The particles are much further apart. √
Movement is very fast. (3)
[12]

QUESTION 6

6.1

CONDUCTORS	INSULATORS
Carbon	PVC
Iron	Plastic
Aluminium	Bakelite

(3)

6.2 6.2.1

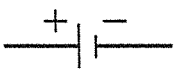

6.2.2

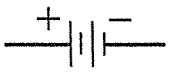

6.2.3

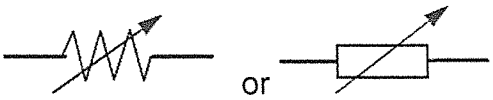

6.2.4

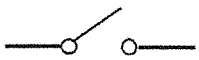

(4 × 1) (4)

6.3

$$I = \frac{V}{R}$$

$$I = \frac{220}{120}$$

$$\underline{I = 1{,}833\ A}$$

(2)

6.4 6.4.1

$$R_T = R_1 + R_2 + R_3$$

$$R_T = 7 + 11 + 21$$

$$\underline{R_T = 39\ \Omega}$$

6.4.2

$$I_T = \frac{V}{R}$$

$$I_T = \frac{12}{39}$$

$$\underline{I_T = 0{,}307\ A}$$

6.4.3

$$E = I^2Rt \text{ or } E = VIT \text{ or } E = \frac{V^2}{R'}$$

$$E = 0{,}307^2 \times 39 \times (5 \times 60)$$

$$\underline{E = 1102{,}713\ J}$$

(3 × 1) (3)

6.5 6.5.1 Stays the same

6.5.2 Lower

6.5.3 Rises

(3 × 1) (3)

6.6 6.6.1 Resistivity is the resisting effect of specific type of materials.

6.6.2

6.6.3 The current flowing in a circuit is proportional to the voltage and inversely proportional to the resistance.

6.6.4 Current that reverses polarity continuously.

(4 × 1) (4)

6.7

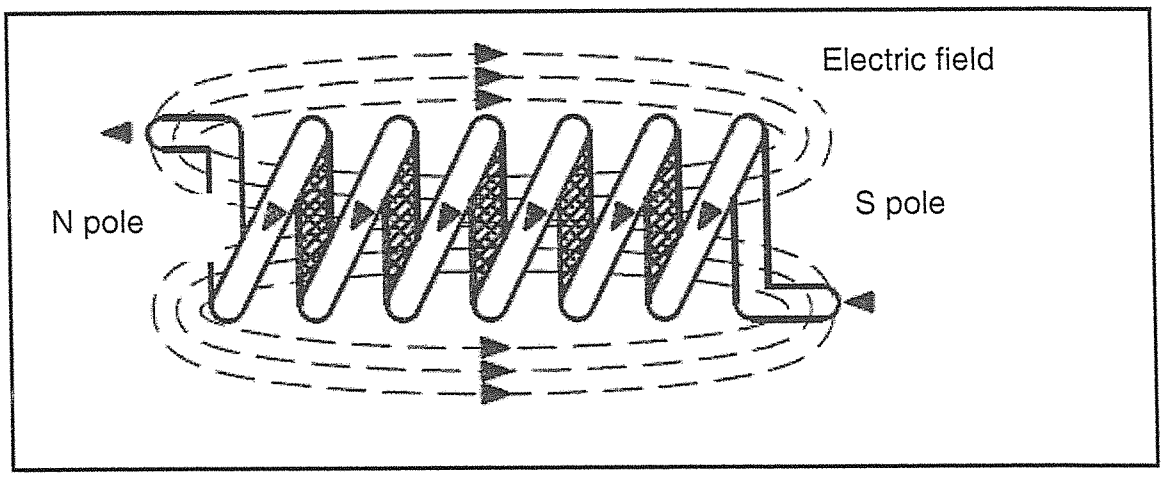

(3)

6.8

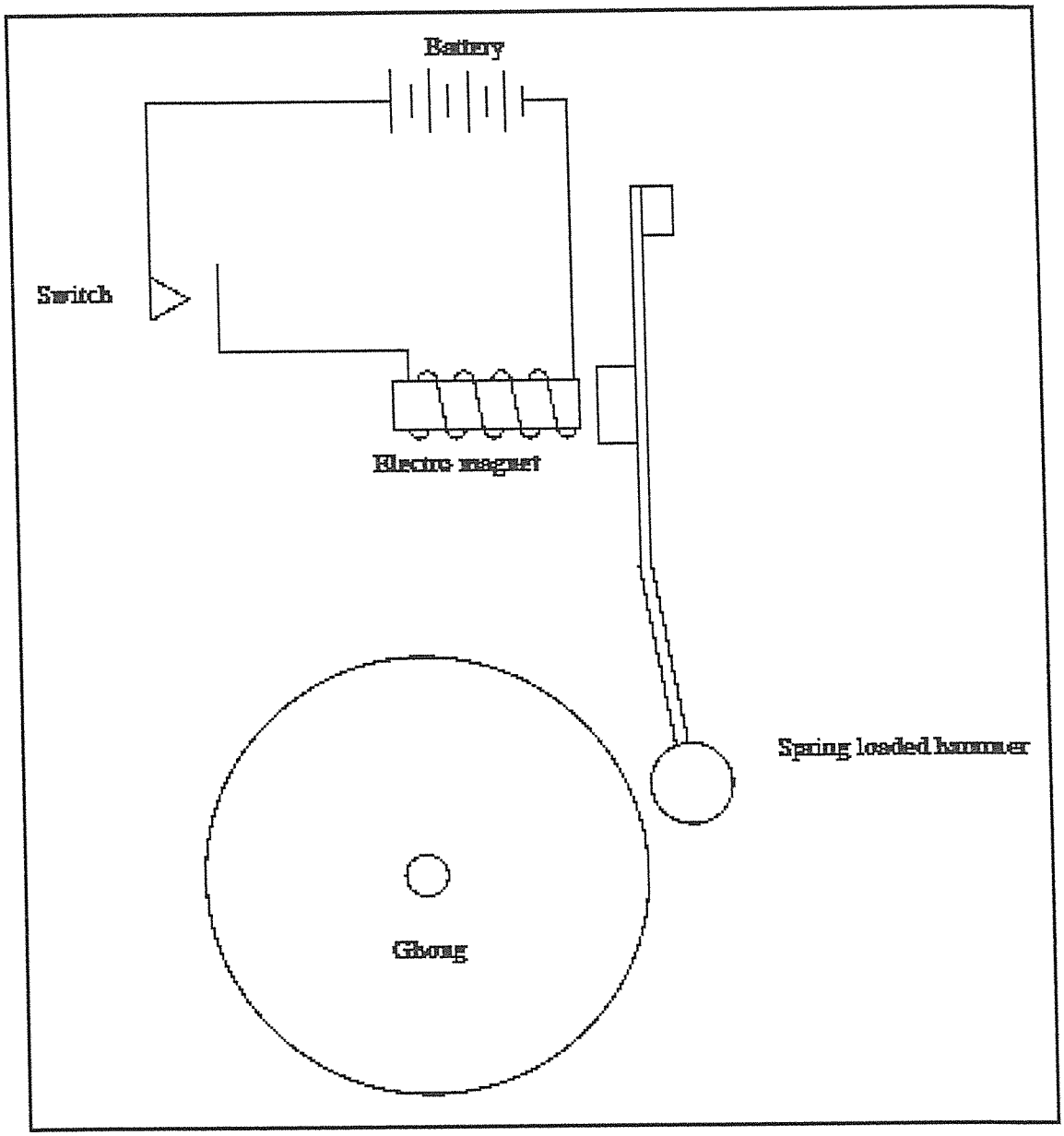

(3)
[25]

TOTAL: 100

Copyright reserved