higher education & training

Department:
Higher Education and Training
REPUBLIC OF SOUTH AFRICA

NATIONAL CERTIFICATE (VOCATIONAL)

MATHEMATICS
(Second Paper)
NQF LEVEL 3

(10501053)

22 February 2018 (X-Paper)
09:00–12:00

REQUIREMENTS: Graph paper

The question paper consists of 8 pages and a formula sheet of 2 pages.

Copyright reserved

TIME: 3 HOURS
MARKS: 100

INSTRUCTIONS AND INFORMATION

1. Answer ALL the questions.
2. Read ALL the questions carefully.
3. Number the answers according to the numbering system used in this question paper.
4. Clearly show ALL calculations, diagrams, graphs, etc., used in determining the answers.
5. If necessary, answers should be rounded off to THREE decimal places, unless stated otherwise.
6. Write neatly and legibly.

Copyright reserved

QUESTION 1

1.1 The paperweight below contains a glow-in-the-dark liquid and is made up of a cone and a cylinder. The cone has a radius of 3 cm and a height of 4 cm. The diameter of the cylinder is 20 cm and the height of the cylinder is 8 cm.

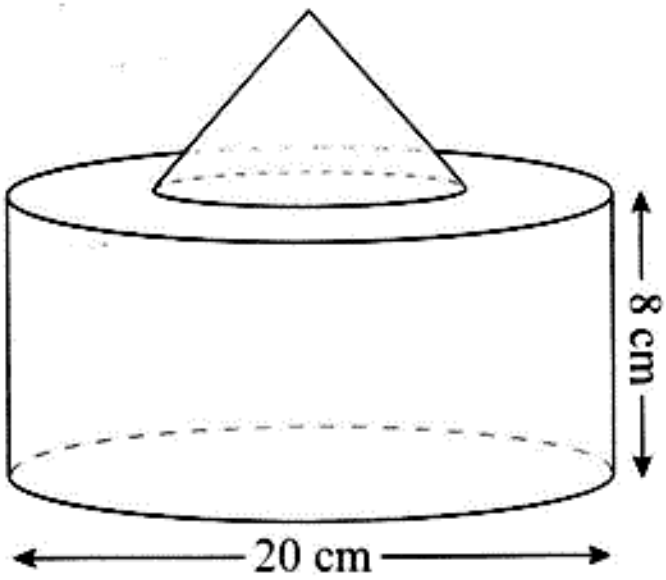

Calculate the volume of the paperweight. (4)

1.2 An architect is designing pillars to pay tribute to soldiers who were killed in the South African War. He decides to make THREE identical pillars out of concrete and have the names of every soldier that died engraved on the pillars. Each pillar will be constructed from a prism and a square right pyramid. The prism has dimensions of 1 m × 1 m × 4 m. The right square pyramid has a base length of 1 m and a height of 0,5 m.

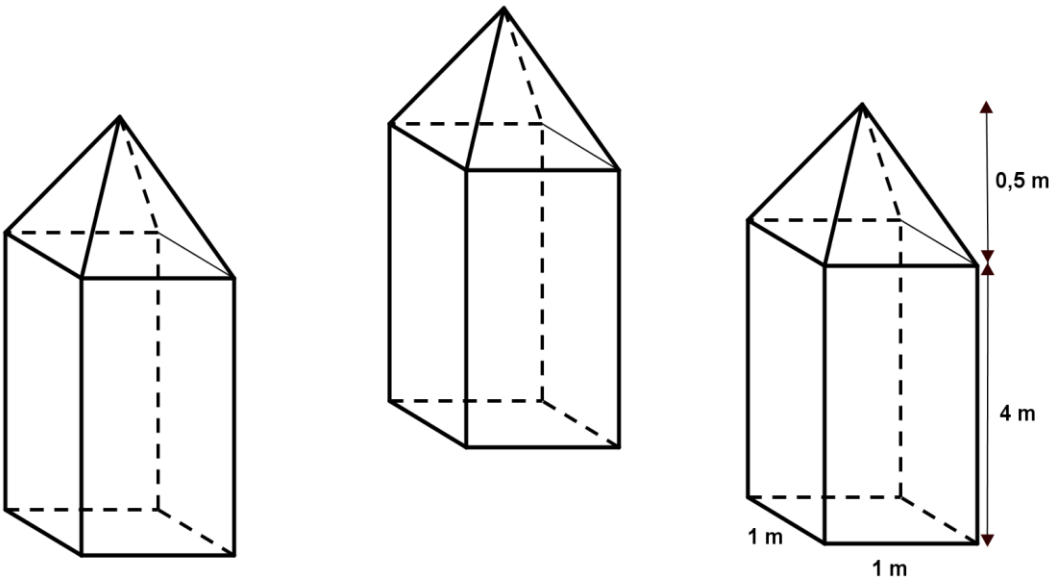

Determine the volume of concrete needed to construct ALL THREE pillars. (4)

1.3 A (-5;-3), B (6;2) and C (3;9) are the coordinates of the THREE vertices of ΔABC. BN ⊥ CA and CM = MA.

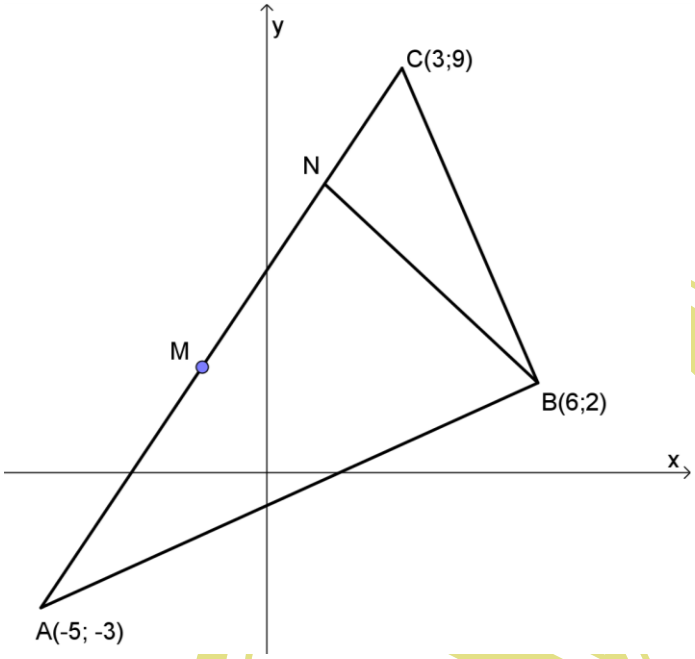

Calculate the following:

1.3.1 The gradient of AC (2)

1.3.2 The equation of AC (3)

1.3.3 The equation of BN (4)

1.3.4 The coordinates of N (5)

1.3.5 The length of AC in simplified surd form (3)

[25]

QUESTION 2

2.1 Prove, without using a calculator, that:

$$\frac{\sin(90° + x).\sin(-x).\tan(180° + x)}{\cos(360° - x).\sin(180° + x)} = \tan x$$ (4)

2.2 Make use of trigonometric identities to prove the following:

$$\frac{\sin x + \cos x}{\tan x + 1} = \cos x$$ (4)

2.3 Calculate the value/s of θ if $\sin(\theta + 150°) = -0{,}5$ where $\theta \in [0°; 360°]$. (5)

2.4 In the diagram below, P is the midpoint of BC and $A\hat{P}C = x$.

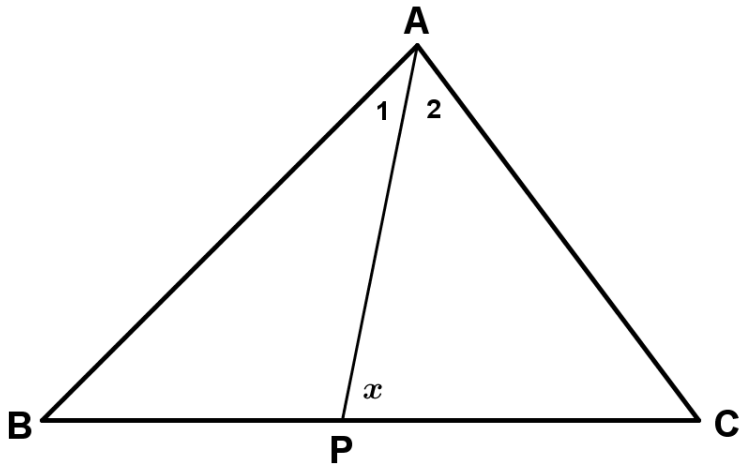

2.4.1 Express $A\hat{P}B$ in terms of x. (1)

2.4.2 Use the sine rule to show that $AB = \frac{BP.\sin x}{\sin A_1}$. (4)

2.4.3 Hence, prove that $\frac{AB}{AC} = \frac{\sin A_2}{\sin A_1}$. (5)

2.4.4 If AC = 20,2 units, $\hat{A}_1 = 33°$ and $\hat{A}_2 = 42°$, calculate the length of AB. (2)

[25]

QUESTION 3

3.1 Sir Garfield Sobers is a former West Indian cricketer who played for the West Indian national team between 1954 and 1974. He is widely considered the greatest all-rounder that ever played the game.

Listed below are the scores he achieved in the last 28 innings he played.

12	66	42	68	64	38	74
77	70	100	51	59	49	66
80	61	84	45	53	60	65
34	43	67	72	90	51	7

3.1.1 Determine the mean score over the 28 innings. (2)

3.1.2 Determine the upper and lower quartiles of the data. (4)

3.1.3 Determine the upper and lower fence values. (4)

3.1.4 Construct a box-and-whisker-diagram for the above information showing any outliers. (5)

NCV

3.2 Modern tyres are designed with deep grooves in the tread patterns that channel water away from the tyres on wet roads. As the tread wears away over time, these grooves become shallower and lose their ability to displace the water under the tyre effectively. This can result in hydroplaning where the tyres can no longer grip the road and the car can easily skid out of control.

A factory that produces car tyres takes a sample of 80 tyres. The distance that each tyre lasted in wet conditions was recorded. The results are shown below.

Distance $(\times 1\,000)$ km	Frequency (f_i)	Midpoint (x_i)	$f_i \times x_i$	< Cumulative frequency
$0 \le x < 15$	4	7,5	30	4
$15 \le x < 30$	13			
$30 \le x < 45$	17			
$45 \le x < 60$	22			
$60 \le x < 75$	20			
$75 \le x < 90$	4			
$90 \le x < 105$	0			
Total	80		$\sum f_i x_i$	

3.2.1 Copy and complete the frequency distribution table above in the ANSWER BOOK. The first row has been done. (6)

Use the table in QUESTION 3.2.1 to answer the following questions.

3.2.2 Calculate the average distance covered by the sample. (2)

3.2.3 Use the supplied graph paper to sketch the ogive curve using the less than cumulative frequency and the upper class limit. (5)

3.2.4 Use the ogive curve to estimate the interquartile range of the distances that the tyres lasted. (2)

[30]

QUESTION 4

4.1 The treasurer of Osizweni Country Club compared the actual income and expenses figures against the projected budget figures at the end of the financial year. Provided below is some information she recorded.

Complete the table by writing down the correct amount next to the question number (4.1.1–4.1.7) in the ANSWER BOOK.

ITEM	BUDGETED AMOUNT	ACTUAL AMOUNT	VARIANCE
INCOME			
Member contributions	43 800	43 800	0
Income from bar	27 500	**(4.1.1)**	+3 200
Fund raising	12 250	11 000	**(4.1.2)**
Total	**(4.1.3)**	**79 100**	**+4 450**
EXPENSES			
Clubhouse rent	6 000	6 000	0
Water and lights	7 200	5 900	**(4.1.4)**
Wages	**(4.1.5)**	13 600	**-2 200**
Honorarium	8 000	8 000	**(4.1.6)**
Travelling	15 200	15 800	-600
Social functions	22 000	19 000	+3 000
Total	**74 200**	**68 300**	**+5 900**
Surplus	**9 350**	**(4.1.7)**	

(7 × 1) (7)

4.2 Mrs Rioga would like to buy a new piece of land in 3 years' time. Her annual salary is R180 000 and she is prepared to save 15% of her salary each month to buy the land. The land she wants to buy is currently advertised for R60 000. Mrs Rioga believes that the land price will increase by 7,5% a year.

4.2.1 How much money was Mrs Rioga able to save in 3 years? (2)

4.2.2 Calculate the value of the land after 3 years. (3)

4.2.3 Determine Mrs. Rioga's shortfall/surplus after purchasing the land. (2)

4.3 Bhusi decides to invest money in the stock market. She buys R7 000 worth of shares to begin with. In the first 2 years, her investment increases by 5% compounded annually. She invests a further R9 000 at the beginning of the third year and her investment appreciates at a steady rate of 12,5% compounded semi-annually for the rest of the investment period.

4.3.1 Draw a time-line for the above investment. (2)

4.3.2 Calculate the value of the investment after 7 years. (4)

[20]

TOTAL: 100

Copyright reserved

FORMULA SHEET

1. Slant surface area of a pyramid = $\frac{1}{2}a\,l\,n$ or $\frac{1}{2}l\,h_s\,n$ (where n = number of sides)
2. Surface area of triangular pyramid = $\frac{1}{2}bh+\frac{1}{2}pl$ where p=perimeter of the base
3. Surface area of a pyramid with an equilateral triangle as base = $\frac{\sqrt{3}}{4}s^2+\frac{1}{2}pl$
4. Surface area of an equilateral triangular pyramid = $4\times\frac{\sqrt{3}}{4}s^2$
5. Surface area of square pyramid = $b^2+\frac{1}{2}pl$
6. Surface area of a regular hexagonal pyramid = $\frac{3\sqrt{3}}{2}b^2+\frac{1}{2}pl$
7. Volume of a pyramid = $\frac{1}{3}$(area of base) $\times\perp$ height
8. $s=\frac{1}{2}(a+b+c)$ *and* a,b,c *are the sides of the triangle*
9. $A=\sqrt{s(s-a)(s-b)(s-c)}$
10. Circumference of circle = $2\pi r$
11. Area of curved surface of a cone = $\pi r l$ or $\pi r h_s$
12. Slant height of a cone = $l=\sqrt{h^2+r^2}$ or $h_s=\sqrt{\perp h^2+r^2}$
13. Volume of cone = $V_{cone}=\frac{1}{3}\pi r^2\times_{\perp} h$
14. Area of a sphere = $A=4\pi r^2$
15. Volume of a sphere = $V=\frac{4}{3}\pi r^3$
16. $m=\frac{\Delta y}{\Delta x}=\frac{y_2-y_1}{x_2-x_1}$
17. $(x_m\,;y_m)=\left(\frac{x_1+x_2}{2}\,;\frac{y_1+y_2}{2}\right)$
18. $\theta=\tan^{-1}m$
19. Distance = $\sqrt{(x_2-x_1)^2+(y_2-y_1)^2}$
20. $\frac{\sin\theta}{\cos\theta}=\tan\theta$
21. $\sin^2\theta+\cos^2\theta=1$
22. $\frac{\sin A}{a}=\frac{\sin B}{b}=\frac{\sin C}{c}$
23. $a^2=b^2+c^2-2bc\cos\hat{A}$

Copyright reserved

24. $A = \frac{1}{2} ab \sin \hat{C}$

25. $\bar{x} = \frac{\sum_{i=1}^{n} x_i}{n}$

26. $\bar{x} = \frac{\sum f_i x_i}{n}$

27. $Q_{j\ position} = \frac{j}{4}(n+1)$

28. $Q_i = Q_3 - Q_1$

29. Fence = $Q_3 + 1{,}5(Q_i)$

30. Fence = $Q_1 - 1{,}5(Q_i)$

31. $Me = l + \frac{\left(\frac{n}{2} - F\right)}{f} \times c$

32. $Mo = l + \frac{f_m - f_{m-1}}{2f_m - f_{m-1} - f_{m+1}} \times c$

33. $I = A_0 \times \frac{r}{100} \times t$ or $I = \frac{P\,r\,t}{100}$ or $A_t = P(1+in)$

34. $A_t = A_0 \left(1 + \frac{r}{100 \times m}\right)^{t \times m}$ or $A_t = P(1+i)^n$

35. $A_t = A_o (1 - \frac{r}{100})^t$ or $A_t = P(1-i)^n$

Copyright reserved