higher education & training

Department:
Higher Education and Training
REPUBLIC OF SOUTH AFRICA

NATIONAL CERTIFICATE (VOCATIONAL)

MATHEMATICS
(Second Paper)
NQF LEVEL 4

(10501064)

7 November 2019 (X-paper)
09:00–12:00

This question paper consists of 10 pages, 2 addenda and a formula sheet of 2 pages.

Copyright reserved

TIME: 3 HOURS
MARKS: 100

INSTRUCTIONS AND INFORMATION

1. Answer all the questions.
2. Read all the questions carefully.
3. Number the answers according to the numbering system used in this question paper.
4. Start each question on a new page.
5. Use only a blue or black pen.
6. Clearly show all the calculations, diagrams, graphs, et cetera, which you have used in determining the answers.
7. If necessary, answers should be rounded off to three decimal places, unless stated otherwise.
8. Diagrams are not drawn to scale.
9. Write neatly and legibly.

Copyright reserved

QUESTION 1

1.1 In the diagram below (not drawn to scale), line AEB is parallel to line JCD. Line HC is perpencicular to BC and HC is produced to G. $A\hat{B}C = 60°$ and $A\hat{E}F = 160°$

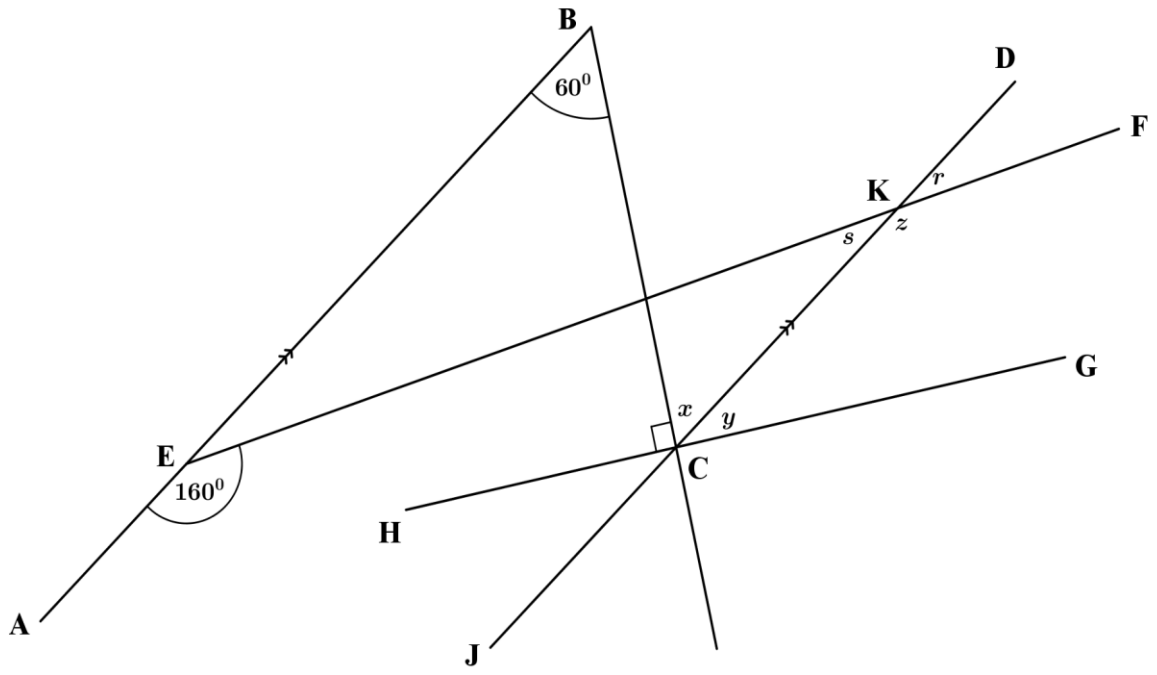

Calculate the size of each of the angles marked x, y, z, s and r. (5)

1.2 In the figure below diameter DE of the circle is produced to C. A and B are points on the circle with line AB also produced to C. O is the cente of the circle. $BC = OA$ and $A\hat{C}O = 28°$. Calculate $A\hat{O}D$ and give reasons for the answer.

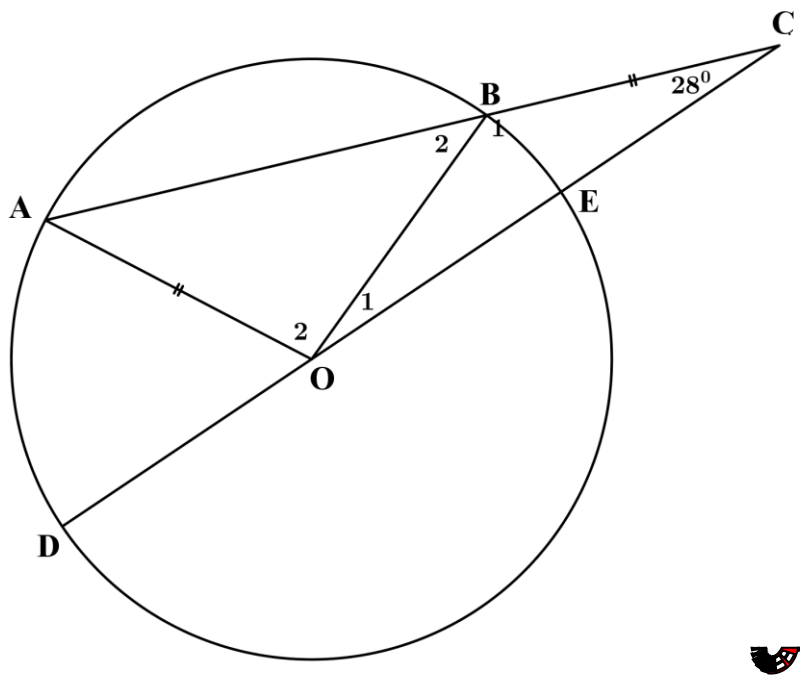

(5)

1.3 In the diagram below, two tangents RP and RS are drawn from a point R outside the circle with centre O. PO produced cuts the circle at B and meets the tangent RS produced at T. Let $\hat{S}_1 = x$.

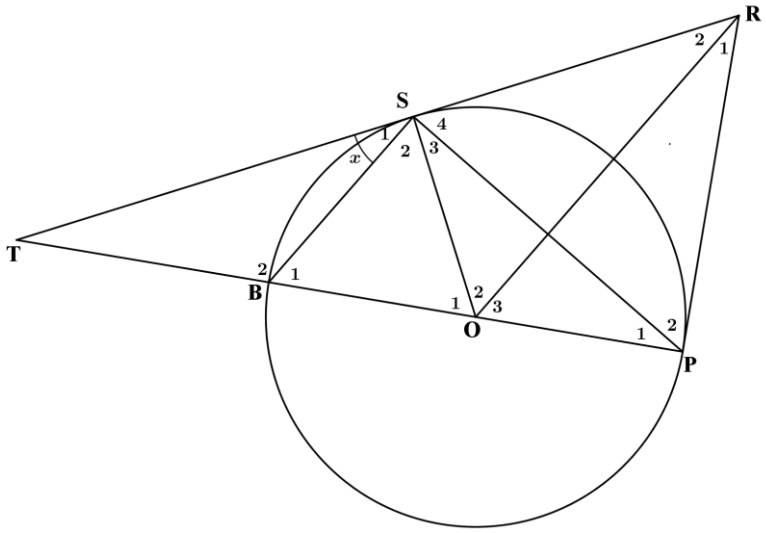

1.3.1 Prove that POSR is a cyclic quadrilateral. (3)

1.3.2 Prove that SB ∥ OR. (2)

1.4 A circle centred at P (3; 2) touches the x − axis at point C. DE is a tangent to the circle, touching it at point A. The equation of the tangent DE is given by $y = \frac{4}{3}x + \frac{4}{3}$.

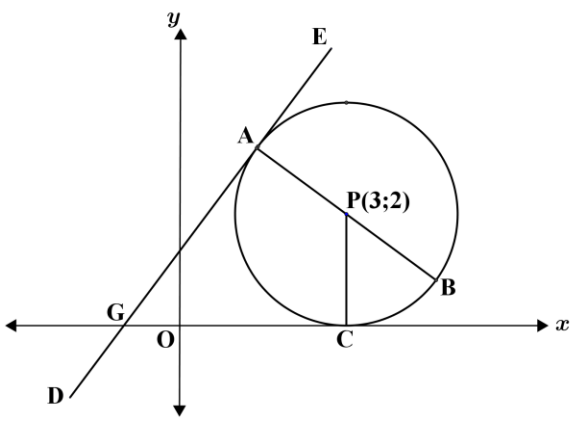

1.4.1 Why is PC perpendicular to OC? (1)

1.4.2 Determine the coordinates of C. (1)

1.4.3 Determine the equation of the circle with cente P in the form $(x - a)^2 + (y - b)^2 = r^2$ (3)

1.4.4 Determine the coordinates of G, the x −intercept of DE. (2)

1.4.5 Determine the equation of the diameter AB in the form $y = mx + c$ (3)

[25]

QUESTION 2

2.1 Express $\sin 290°$ as a function of an acute angle. (1)

2.2 If $\tan x = \frac{3}{\sqrt{40}}$ and $0° < \hat{x} < 90°$, determine the value of $\cos x$ without the use of a calculator. Leave your answer in surd form. (2)

2.3 Solve for x in the interval $[0^0; 90^0]$ if

$$\frac{\sin 2x \cos x + \cos 2x \sin x}{\cos 2x \cos x - \sin 2x \sin x} = 1$$

(4)

2.4 Simplify the following expression without using a calculator:

$$\frac{2 \sin 50° (\cos 60° \cos 10° + \sin 60° \sin 10°)}{\cos 10°}$$

(4)

2.5 2.5.1 Express $\cos(x + y)$ as ratios of the angles x and y. (1)

2.5.2 Hence derive a formula for $\cos 2x$ in terms of $\sin x$. (3)

2.6 Prove the following identity: $\frac{\cos x + \sin x}{\cos x - \sin x} - \frac{\cos x - \sin x}{\cos x + \sin x} = 2 \tan 2x$ (5)

Copyright reserved

2.7 A, B and C are 3 points on the same horizontal plane. Two cylinderical pipes are planted vertically at B and C. The angle of elevation from D to E is 27°.
AC = 2 000 metres, $B\hat{A}C = 43°$ and $B\hat{C}A = 36°$.

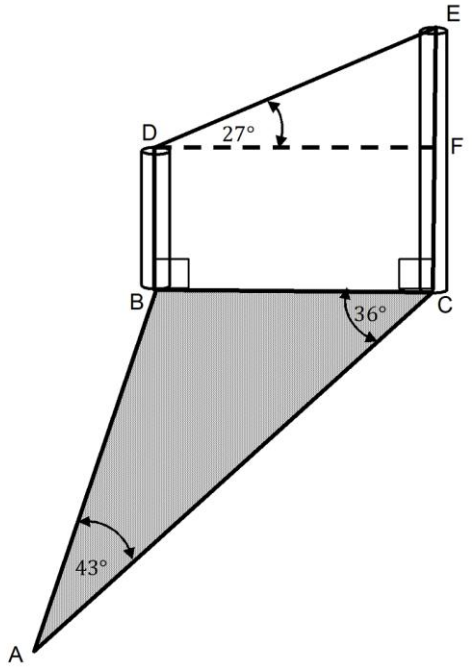

2.7.1 Calculate $A\hat{B}C$. (1)

2.7.2 Calculate DE. (4)

[25]

QUESTION 3

Answer QUESTIONS 3.1, 3.2 and 3.3 on ADDENDA A and B. Write your EXAMINATION NUMBER and CENTRE NUMBER on the ADDENDA, detach them from the question paper and hand them in with the ANSWER BOOK.

The data below shows the mathematics marks of 10 learners at a TVET college for the internal examinations and the final examination.

Internal examinations (x)	80	68	94	72	74	83	56	68	65	75
Final examination (y)	72	71	96	77	82	72	58	83	78	80

3.1 Make a scatter plot of the marks in the above table on ADDENDUM A (attached). (4)

3.2 Calculate the equation of the least squares regression line for the data. No marks will be awarded if answers are taken directly from a calculator. Use one of the two tables on ADDENDUM B (attached) and then complete all the calculations. (6)

3.3 Draw the least squares regression line on ADDENDUM A. (2)

3.4 Calculate the predicted final examination mark for a learner who scores 70 in the internal examination. (3)

[15]

Copyright reserved

QUESTION 4

4.1 A TVET college has sporting facilities on campus which include tennis and cricket. A survey showed that 72% of the learners used the cricket nets and 48% used the tennis courts. Some learners used both while 8% used neither of the facilities. The number of learners at the college is 700.

4.1.1 Determine the number of learners who use at least one of the facilities.

4.1.2 If a learner is selected randomly, what is the probability that this learner uses exactly one facility? [You may use a Venn diagram to determine your answer.]

4.1.3 Determine whether the events, 'using the cricket nets' and 'using the tennis courts' are independent or not.

(3 × 3) (9)

4.2 The data below was obtained from the NSFAS financial aid office at a certain college.

	Receiving financial aid	**Not receiving financial aid**	**Total**
First time recipients	4 222	3 898	8 120
Repeating recipients	1 879	731	2 610
Total	6 101	4 629	10 730

Determine the probability that a student selected at random is:

4.2.1 A student receiving financial aid

4.2.2 A repeating learner and is not receiving financial aid

4.2.3 A first-time learner and is receiving financial aid

(3 × 2) (6)

[15]

QUESTION 5

5.1 Dhimbi invests R3 million into an account earning interest at 6% per annum, compounded annually.

How much will her investment be worth at the end of 6 years? (3)

5.2 Weeds and Lawn is a garden services company that needs to buy a mowing tractor. The cost of the tractor is R210 000,00. The company signs a hire purchase loan agreement involving equal monthly payments over 3 years at an interest rate of 14% per annum. The company pays a 10% deposit. Weed and Lawn also takes out insurance on the tractor at a cost of R22 per month.

5.2.1 What monthly payments will Weed and Lawn have to make? (6)

5.2.2 What will be the total cost to Weed and Lawn at the end of 3 years? (3)

5.3 Given below is the individual rates table obtained from the South African Revenue Services (SARS). Use this information, as well as the income particulars of a certain Mr Dedricks, to answer the questions which follow.

RATES OF TAX FOR INDIVIDUALS **2019 tax year (1 March 2018 - 28 February 2019)**	
Taxable income (R)	**Rates of tax (R)**
0–195 850	18% of taxable income
195 851–305 850	35 253 + 26% of taxable income above 195 850
305 851–423 300	63 853 + 31% of taxable income above 305 850
423 301–555 600	100 263 + 36% of taxable income above 423 300
555 601–708 310	147 891 + 39% of taxable income above 555 600
708 311–1 500 000	207 448 + 41% of taxable income above 708 310
1 500 001 and above	532 041 + 45% of taxable income above 1 500 000

Copyright reserved

Tax rebates 2019 tax year (1 March 2018 - 28 February 2019)	
Tax rebate tax year 2019	
Primary	R14 067
Secondary (65 and older)	R7 713
Tertiary (75 and older)	R2 574

Tax thresholds 2019 tax year (1 March 2018 - 28 February 2019)	
Age	**Tax Year 2019**
Under 65	R78 150
65 and older	R121 000
75 and older	R135 300

Medical tax credit rates from 2013 tax year onwards	
Per month (R)	**2019**
For the taxpayer who paid the medical scheme contributions	R310
For the first dependent	R310
For each additional dependent	R209

[http://www.sars.gov.za/Tax-Rates/Income-Tax/Pages/Rates%20of%20Tax%20for%20Individuals.aspx]

A 45-year-old male, Mr Dedricks, is married and has 2 teenage children. His income and deductions are presented in the table below.

INCOME		DEDUCTIONS	
Income	**Amount**	**Deductions**	**Amount (monthly)**
Gross salary	R25 000 per month	Tax deducted by employer	R2 500,00
Income from investments	R1 000 per month	Pension	R2 500,00
Annual bonus	R30 000	Medical aid	R4 000,00
		UIF	R250,00

Copyright reserved

Use the tax tables and the information above to answer the questions:

5.3.1 Calculate Mr Dedricks' annual taxable income. (2)

5.3.2 Write down the tax bracket (from the tax table) in which Mr Dedricks falls. (1)

5.3.3 Calculate the amount of tax Mr Dedricks must pay or receive from SARS after assessment. (5)

[20]

TOTAL: 100

Copyright reserved

ADDENDUM A

CENTRE NUMBER									

EXAMINATION NUMBER													

QUESTIONS 3.1 AND 3.3

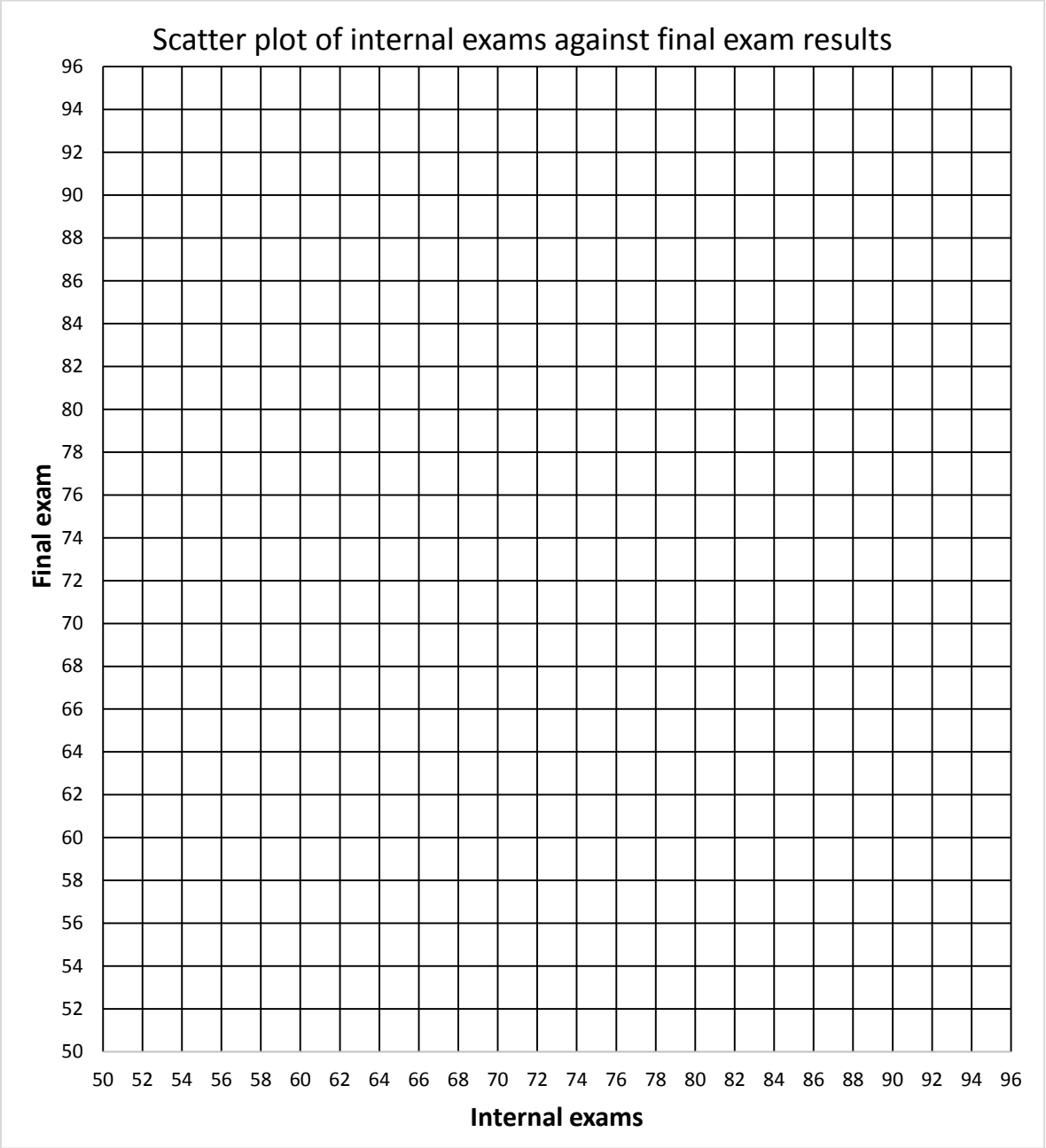

ADDENDUM B

CENTRE NUMBER									

EXAMINATION NUMBER													

QUESTION 3.2 (Option 1)

Internal examinations $(\boldsymbol{x})$	**Final examination** $(\boldsymbol{y})$	$\boldsymbol{xy}$	$\boldsymbol{x^2}$
$\sum x =$	$\sum y =$	$\sum x.y =$	$\sum x^2 =$
$\bar{x} =$	$\bar{y} =$		

QUESTION 3.2 (Option 2)

Internal examinations (x)	**Final examination** (y)	$(\boldsymbol{x}-\bar{\boldsymbol{x}})(\boldsymbol{y}-\bar{\boldsymbol{y}})$	$(\boldsymbol{x}-\bar{\boldsymbol{x}})^2$
$\sum x =$	$\sum y =$	$\sum(x-\bar{x})(y-\bar{y}) =$	$\sum(x-\bar{x})^2 =$
$\bar{x} =$	$\bar{y} =$		

Copyright reserved

FORMULA SHEET

NOTE: Some of the formulae in this formula sheet may not be generally true, but may hold under certain conditions. The candidate is required to select the appropriate formulae for a given situation.

1. $y = mx + c$

2. $m = \dfrac{y_2 - y_1}{x_2 - x_1}$

3. $y - y_1 = m(x - x_1)$

4. $(x-a)^2 + (y-b)^2 = r^2$

5. $M\left(\dfrac{x_1 + x_2}{2}; \dfrac{y_1 + y_2}{2}\right)$

6. $m = \tan\theta$

7. $\text{Distance} = \sqrt{(x_2 - x_1)^2 + (y_2 - y_1)^2}$

8. $\dfrac{\sin\theta}{\cos\theta} = \tan\theta$

9. $\sin^2\theta + \cos^2\theta = 1$

10. $\sin(\alpha \pm \beta) = \sin\alpha\cos\beta \pm \sin\beta\cos\alpha$

11. $\cos(\alpha \pm \beta) = \cos\alpha\cos\beta \mp \sin\alpha\sin\beta$

12. $\sin 2\theta = 2\sin\theta\cos\theta$

13. $\cos 2\theta = \cos^2\theta - \sin^2\theta$

14. $\cos 2\theta = 1 - 2\sin^2\theta$

15. $\cos 2\theta = 2\cos^2\theta - 1$

16. $\dfrac{\sin\hat{A}}{a} = \dfrac{\sin\hat{B}}{b} = \dfrac{\sin\hat{C}}{c}$

17. $a^2 = b^2 + c^2 - 2bc\cos\hat{A}$

18. $\bar{x} = \dfrac{\sum_{i=1}^{n} x_i}{n}$

19. $\text{Variance} = s^2 = \dfrac{\sum (x_i - \bar{x})^2}{n}$

Copyright reserved

20. Standard deviation $= \sqrt{\dfrac{\sum (x_i - \bar{x})^2}{n}}$

21. $\hat{y} = a + bx$

22. $b = \dfrac{\sum (x - \bar{x})(y - \bar{y})}{\sum (x - \bar{x})^2}$ or $b = \dfrac{n\sum xy - \sum x \sum y}{n\sum x^2 - (\sum x)^2}$

23. $a = \bar{y} - b\bar{x}$

24. $I = A_0 \times \dfrac{r}{100} \times t$ or $I = \dfrac{P\,r\,t}{100}$ or $A = P(1 + in)$

25. $A_t = A_0 \left(1 + \dfrac{r}{100 \times m}\right)^{t \times m}$ or $A_t = P\left(1 + \dfrac{r}{100}\right)^n$ or $A = P(1 + i)^n$

26. $A_t = A_o \left(1 - \dfrac{r}{100}\right)^t$ or $A = P(1 - in)$ or $A = P(1 - i)^n$

27. $i = \dfrac{r}{100}$

28. $\mathrm{P(A)} = \dfrac{n(\mathrm{A})}{n(\mathrm{S})}$

29. $\mathrm{P(A\ and\ B)} = \mathrm{P(A)} \times \mathrm{P(B)}$

30. $\mathrm{P(A\ or\ B)} = \mathrm{P(A)} + \mathrm{P(B)}$

31. $\mathrm{P(A\ or\ B)} = \mathrm{P(A)} + \mathrm{P(B)} - \mathrm{P(A\ and\ B)}$

32. $\mathrm{P(A/B)} = \dfrac{\mathrm{P(A\ and\ B)}}{\mathrm{P(B)}}$

Copyright reserved